Elektrim® 575V

NEMA 213T-445T (Output up to and including 100HP)

METRIC IEC 132-315 (Output up to and including 125HP)

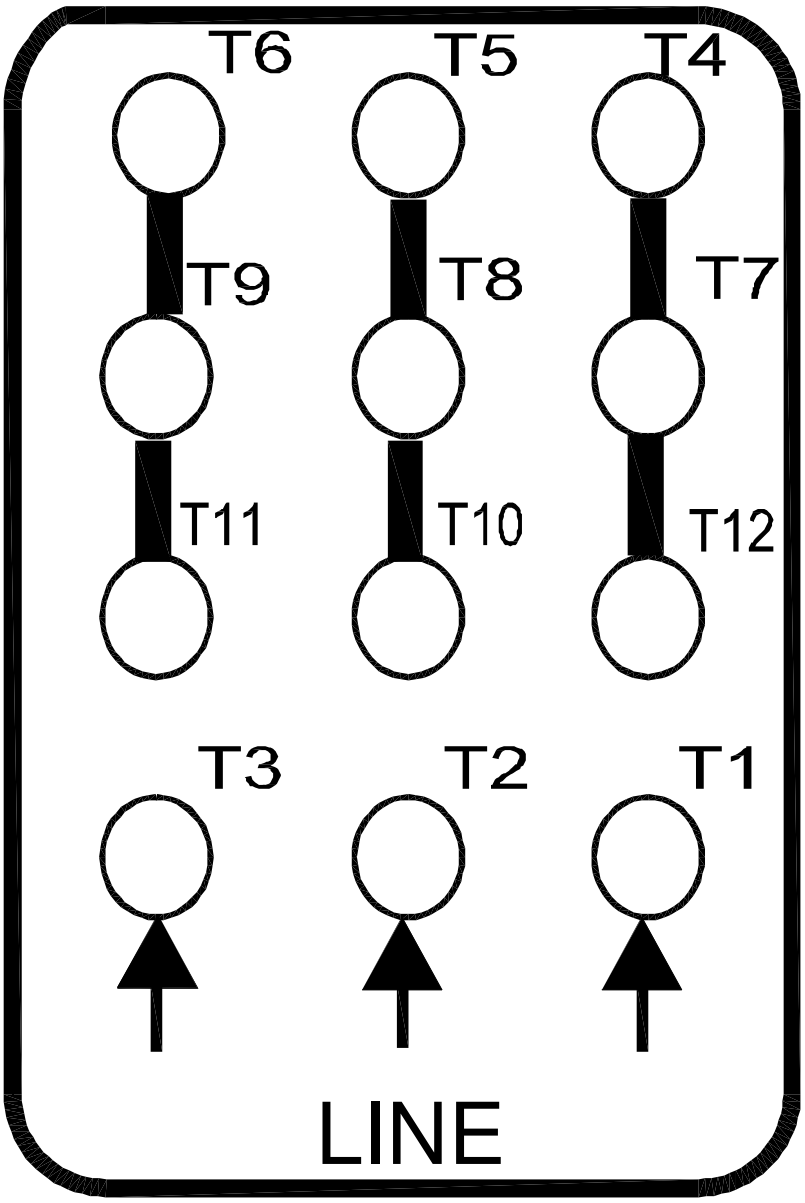

CONNECTION DIAGRAM

12 Lead Motor