Uncontrolled Copy

版本	ECO	编制	日期	批准	日期
D	ECO-0035803	A.BAUGHMAN	07-17-2013	T.RILEY	07-17-2013

总要求：

轴跳动： 0.03/25.4mm(外伸轴).

轴承： 球轴承.

安装位置： 垂直 - 轴向下

电气数据：

过载保护： 自动复位 (T.I. 7AM 036)

引线： 18GA，厚.06[1.5] PVC 105℃ 绝缘

接地线： 18GA，厚.03[0.8] 绿色绝缘

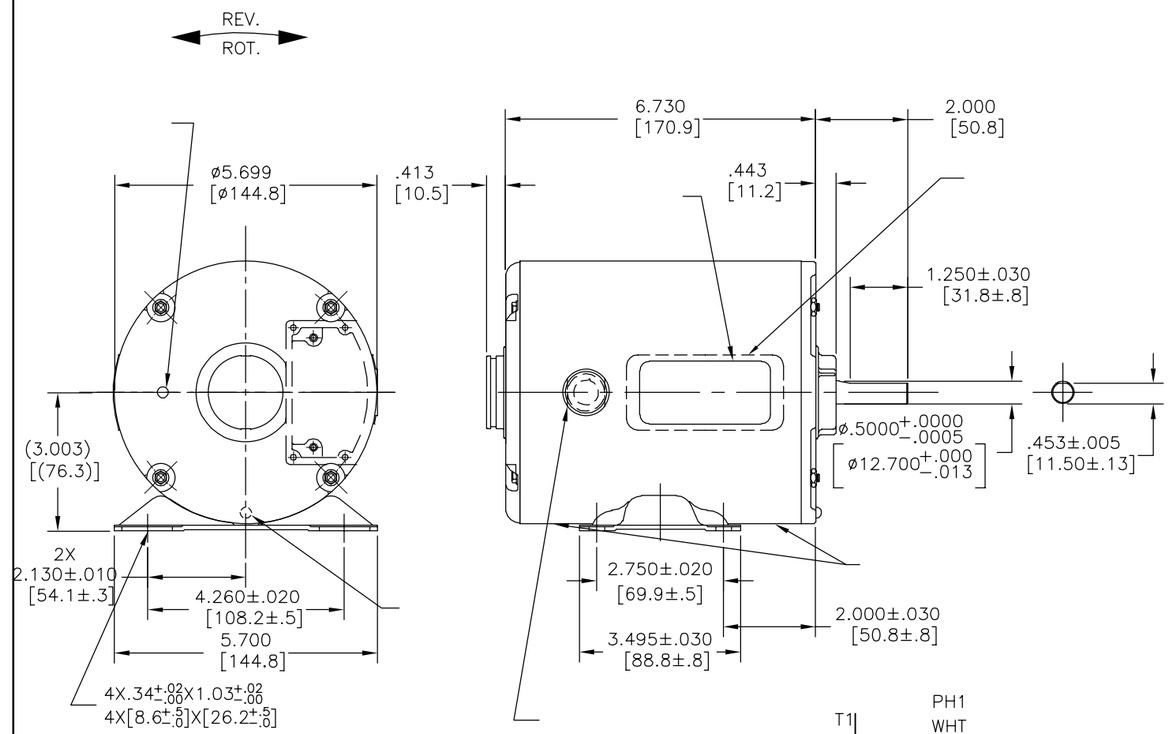

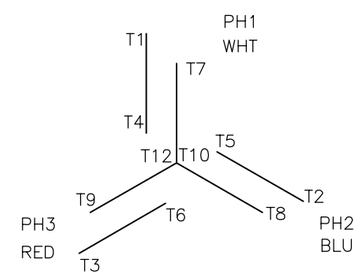

铭牌数据	外部连接详图
MODEL NO.: P48A90A01 CUST. P/N: H261A HP: 1/3 ROT.: REV. RPM: 1725/1425 TYPE: UP FRAME: 48Y VOLTS: 208-230/460 PH: 3 AMPS: 1.1-1.1/0.6 HZ: 60/50 INS.: B AMB.: 40 °C DUTY: CONT. CAP.: --- CODE: K ENCL: ENCLOSED	HIGH VOLTAGE ④—⑦ ① L1 ⑤—⑧ ② L2 ⑥—⑨ ③ L3 LOW VOLTAGE ④ ⑦—① L1 ⑤ ⑧—② L2 ⑥ ⑨—③ L3 TO REVERSE INTERCHANGE ANY 2 LINE LEADS 614131-363

性能曲线编号	转矩在----RPM (25° C)	批准样品	UL部件		CSA	
			文件号	指南	文件号	指南
C32734	18.3 OZ. FT.	0604305C				

颜色	长度	端子或剥线长度
	5.0/7.0 [127/178]	
	5.0/7.0 [127/178]	
	5.0/7.0 [127/178]	
	5.0/7.0 [127/178]	
	5.0/7.0 [127/178]	
	5.0/7.0 [127/178]	
	5.0/7.0 [127/178]	
	5.0/7.0 [127/178]	
	5.0/7.0 [127/178]	
	5.0/7.0 [127/178]	

引线数据

非引线端机壳	
非引线端端盖	
引线端机壳	
引线端端盖	

开启方式

用户	DISTRIBUTION SERVICES

形位公差
▱ 平面度
— 直线度
∠ 倾斜度
⊥ 垂直度
// 平行度
○ 圆度
⌭ 圆柱度
⌓ 面轮廓度
⌒ 线轮廓度
↗ 圆跳动
⌖ 位置度
◎ 同轴度
⌯ 对称度

ASME Y14.5M 1994

REGAL-BELOIT CORPORATION (RBC) 在个别领域为客户提供技术支持。鉴于RBC未收到任何涉及电机使用和应用环境的数据，电机的适用性由客户自己决定。

未注公差尺寸仅供参考。

绘图: C.ZHOU	07-11-2007	
批准: .	.	
第三角投影	图纸格式发布日期 11-11-2011	图纸格式版本 H

机密：本图纸及相关信息所有权归REGAL-BELOIT CORPORATION，未经REGAL-BELOIT CORPORATION书面授权，不得泄露、复制、传播或作其他用途。--版权所有

REGAL-BELOIT CORPORATION

名称: MODEL-RFHP-48FR OUTLINE

图幅: C 图号: P48A90A01

比例: NONE 页号: 1

Uncontrolled Copy

REV	ECO	REV BY	DATE	APPD	DATE
D	ECO-0035803	A.BAUGHMAN	07-17-2013	T.RILEY	07-17-2013

GENERAL INFORMATION:

SHAFT RUNOUT: .001 [.03] T.I.R. PER INCH LENGTH OF EXTENSION

BEARINGS: BALL

MOUNTING POSITION: ALL ANGLE

ELECTRICAL DATA:

LEADS: NO. 18 GA., .06 [1.5] THK. PVC 105°C INSUL.

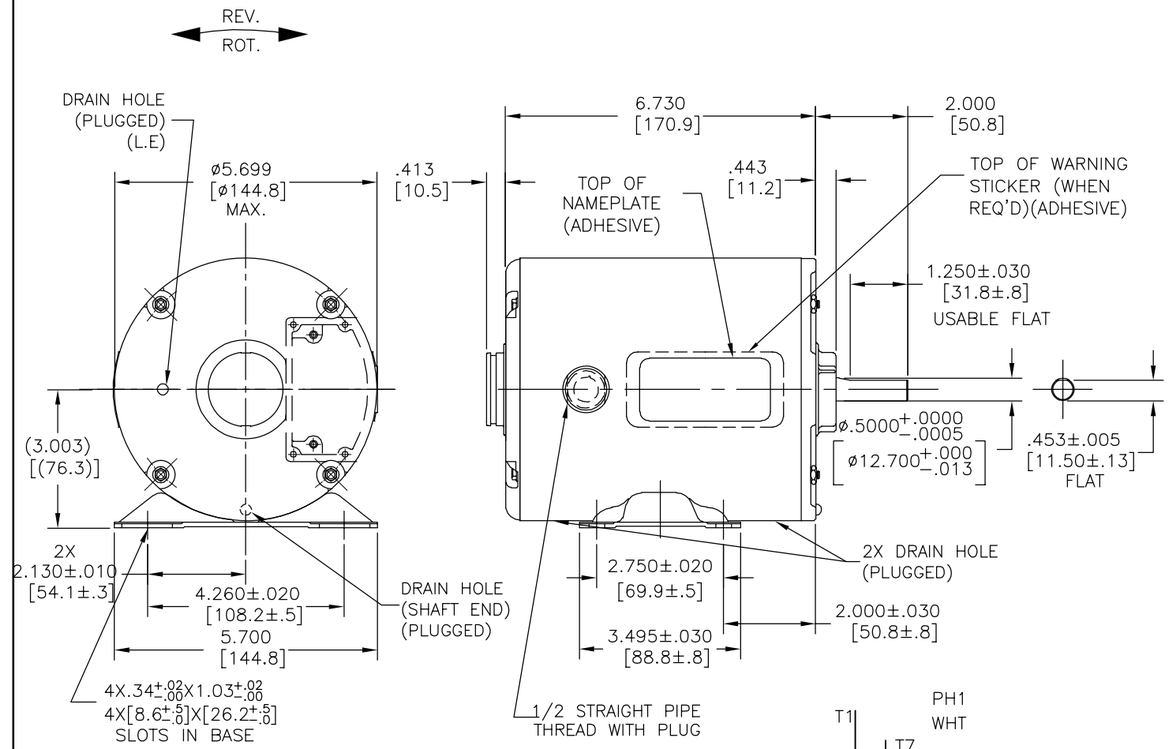

NAMEPLATE DATA:	EXTERNAL CONNECTION DIAGRAM
MODEL NO.: P48A90A01 CUST. P/N: H261A HP: 1/3 ROT.: REV. RPM: 1725/1425 TYPE: UP FRAME: 48Y VOLTS: 208-230/460 PH: 3 AMPS: 1.1-1.1/0.6 HZ: 60/50 INS.: B AMB.: 40 °C DUTY: CONT. CAP.: --- CODE: K ENCL: ENCLOSED	HIGH VOLTAGE ④—⑦ ① L1 ⑤—⑧ ② L2 ⑥—⑨ ③ L3 LOW VOLTAGE ④ ⑦—① L1 ⑤ ⑧—② L2 ⑥ ⑨—③ L3 TO REVERSE INTERCHANGE ANY 2 LINE LEADS 614131-363

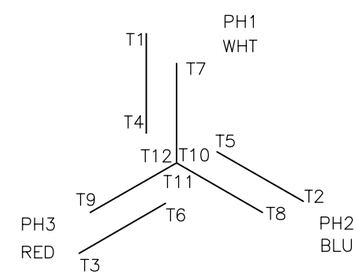

RED(T9)	5.0/7.0 [127/178]	.50[12.7] SKIN
RED(T6)	5.0/7.0 [127/178]	.50[12.7] SKIN
RED(T3)	5.0/7.0 [127/178]	.50[12.7] SKIN
BLUE(T8)	5.0/7.0 [127/178]	.50[12.7] SKIN
BLUE(T5)	5.0/7.0 [127/178]	.50[12.7] SKIN
BLUE(T2)	5.0/7.0 [127/178]	.50[12.7] SKIN
WHITE(T7)	5.0/7.0 [127/178]	.50[12.7] SKIN
WHITE(T4)	5.0/7.0 [127/178]	.50[12.7] SKIN
WHITE(T1)	5.0/7.0 [127/178]	.50[12.7] SKIN
COLOR	LENGTH	TERMINAL OR STRIP LENGTH

LEAD DATA

MAIN FRAME – OLE	ENCLOSED WITH DRAIN PLUG
END FRAME – OLE	ENCLOSED WITH DRAIN PLUG
MAIN FRAME – LE	ENCLOSED WITH DRAIN PLUG
END FRAME – LE	ENCLOSED WITH DRAIN PLUG

ENCLOSURE

PERFORMANCE CURVE NO.	TORQUE @ 1725 RPM (25°C)	APPROVED SAMPLE	UL COMPONENT FILE #	UL COMPONENT CCN #	CSA FILE #	CSA CLASS #
C32734	18.3 OZ. FT.	0604305C				

CUSTOMER	DISTRIBUTION SERVICES

GEOMETRIC CHARACTERISTICS & SYMBOLS
- ▱ FLATNESS
- — STRAIGHTNESS
- ∠ ANGULARITY
- ⊥ PERPENDICULARITY (SQUARENESS)
- // PARALLELISM
- ○ ROUNDNESS (CIRCULARITY)
- ⌭ CYLINDRICITY
- ⌓ PROFILE OF ANY SURFACE
- ⌒ PROFILE OF ANY LINE
- ↗ RUNOUT
- ⌖ TRUE POSITION
- ◎ CONCENTRICITY
- ⌯ SYMMETRY

ASME Y14.5M 1994

REGAL–BELOIT CORPORATION (RBC) PROVIDES TECHNICAL ASSISTANCE TO OUR CUSTOMERS IN SEVERAL AREAS. SINCE RBC DOES NOT RECEIVE ALL DATA CONCERNING THE USE AND APPLICATION OF THE MOTOR, THE SUITABILITY OF THE MOTOR FOR THE APPLICATION MUST BE DETERMINED BY THE CUSTOMER.

DIMENSIONS WITHOUT TOLERANCES ARE FOR REFERENCE ONLY.

DR BY: C.ZHOU 07-11-2007
APPD: . .
THIRD ANGLE PROJECTION
EDS DATE 11-11-2011
FORMAT REV H

CONFIDENTIAL: THIS DRAWING AND ITS INFORMATION ARE THE EXCLUSIVE AND CONFIDENTIAL PROPERTY OF REGAL–BELOIT CORPORATION AND ARE NOT TO BE DISCLOSED, DUPLICATED, DISTRIBUTED OR OTHERWISE USED WITHOUT THE WRITTEN CONSENT OF REGAL–BELOIT CORPORATION. –ALL RIGHTS RESERVED.

REGAL **REGAL-BELOIT CORPORATION**

DESCRIPTION: MODEL–RFHP–48FR OUTLINE

SIZE C | DWG NO P48A90A01

SCALE NONE | SHEET 1

Uncontrolled Copy

REVISION:	ECO	REVISADO POR:	FECHA:	APROBADO POR:	FECHA:
D	ECO-0035803	A.BAUGHMAN	07-17-2013	T.RILEY	07-17-2013

INFORMACION GENERAL:

OSCILACION DE FLECHA: .001 [.03] L.T.I. POR PULG. LONGITUD DE EXTENSION

BALEROS: BALAS

POSICION DEL MONTAJE: TODOS LOS ANGULOS

INFORMACION ELECTRICA:

CABLES: CAL. #18, .06 [1.5] ESP. PVC 105°C AISLANTE

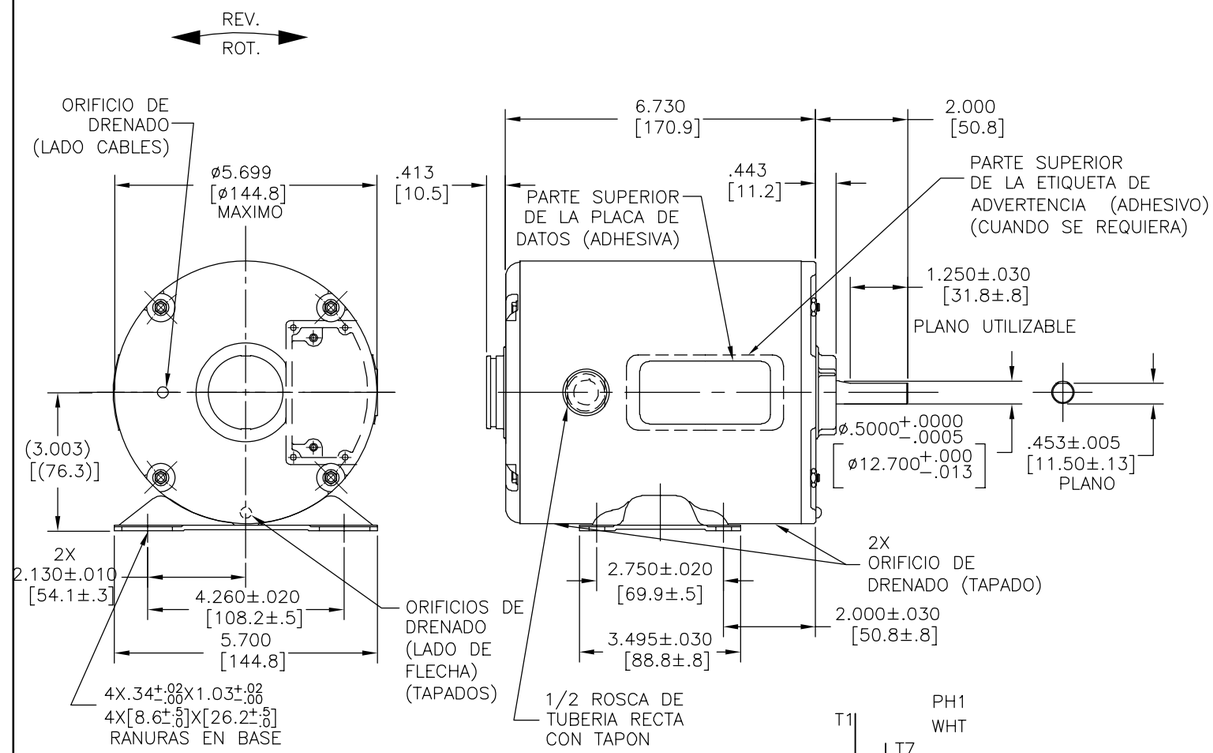

INFORMACION DE ETIQUETA:	DIAGRAMA DE CONEXION EXTRNA
MODEL NO.: P48A90A01 CUST. P/N: H261A HP: 1/3 ROT.: REV. RPM: 1725/1425 TYPE: UP FRAME: 48Y VOLTS: 208-230/460 PH: 3 AMPS: 1.1-1.1/0.6 HZ: 60/50 INS.: B AMB.: 40 °C DUTY: CONT. CAP.: --- CODE: K ENCL: ENCLOSED	HIGH VOLTAGE ④—⑦ ① L1 ⑤—⑧ ② L2 ⑥—⑨ ③ L3 LOW VOLTAGE ④ ⑦—① L1 ⑤ ⑧—② L2 ⑥ ⑨—③ L3 TO REVERSE INTERCHANGE ANY 2 LINE LEADS 614131-363

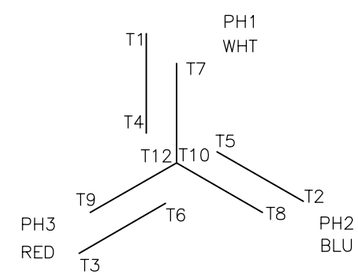

COLOR	LONGITUD	TERMINAL O LONGITUD DE DESFORRE
ROJO(T9)	5.0/7.0 [127/178]	.50[12.7] FORRO
ROJO(T6)	5.0/7.0 [127/178]	.50[12.7] FORRO
ROJO(T3)	5.0/7.0 [127/178]	.50[12.7] FORRO
AZUL(T8)	5.0/7.0 [127/178]	.50[12.7] FORRO
AZUL(T5)	5.0/7.0 [127/178]	.50[12.7] FORRO
AZUL(T2)	5.0/7.0 [127/178]	.50[12.7] FORRO
BLANCO(T7)	5.0/7.0 [127/178]	.50[12.7] FORRO
BLANCO(T4)	5.0/7.0 [127/178]	.50[12.7] FORRO
BLANCO(T1)	5.0/7.0 [127/178]	.50[12.7] FORRO

INFORMACION DE CABLES

TIPO DE MOTOR		
DE CARCASA – OLE	CERRADO	DREN CON TAPON
DE TAPA – OLE	CERRADO	DREN CON TAPON
DE CARCASA – LE	CERRADO	DREN CON TAPON
DE TAPA – LE	CERRADO	DREN CON TAPON

CURVAS DE FUNCIONAMIENTO	TORSION @---- RPM (25°C)	MUESTRA APROBADA	COMPONENTE UL #ARCHIVO	COMPONENTE UL CCN #	CSA #ARCHIVO	CSA CLASE #
C32734	18.3 OZ. FT.	0604305C				

CLIENTE	DISTRIBUTION SERVICES

CARACTERISTICAS DE GEOMETRIA Y SIMBOLOS
- PLANICIDAD
- RECTITUD
- ANGULARIDAD
- PERPENDICULARIDAD (A ESCUADRA)
- PARALELISMO
- REDONDEZ (CIRCULARIDAD)
- CILINDRICIDAD
- PERFIL DE CUALQUIER SUPERFICIE
- PERFIL DE CUALQUIER LINEA
- VARIACION
- POSICION REAL
- CONCENTRICIDAD
- SIMETRIA

ASME Y14.5M 1994

REGAL–BELOIT CORPORATION (RBC) PROVEE ASISTENCIA TECNICA A NUESTROS CLIENTES EN VARIAS AREAS. DESDE QUE RBC NO RECIBE TODOS LOS DATOS EN RELACION AL USO Y A LA APLICACION DEL MOTOR, LA APLICACION ADECUADA DEL MOTOR DEBE SER DETERMINADA POR EL CLIENTE.

DIMENSIONES SIN TOLERANCIA SON DE REFERENCIA SOLAMENTE

DIBUJADO POR: C.ZHOU 07-11-2007
APROBADO POR: . .
TERCER ANGULO DE PROYECCION
FECHA EDS: 11-11-2011
REV. FORMATO: H

CONFIDENCIAL: ESTE DIBUJO Y SU INFORMACION SON PROPIEDAD DE USO EXCLUSIVO Y CONFIDENCIAL DE REGAL–BELOIT CORPORATION. Y NO DEBERAN SER REVELADOS, DUPLICADOS, DISTRIBUIDOS O USARSE DE OTRA MANERA SIN EL CONSENTIMIENTO ESCRITO DE REGAL–BELOIT CORPORATION. –TODOS LOS DERECHOS RESERVADOS.

REGAL **REGAL-BELOIT CORPORATION**

DESCRIPCION: MODEL–RFHP–48FR OUTLINE

TAMAÑO: C
NUMERO DE DIBUJO: P48A90A01
ESCALA: NONE
HOJA: 1