Uncontrolled Copy

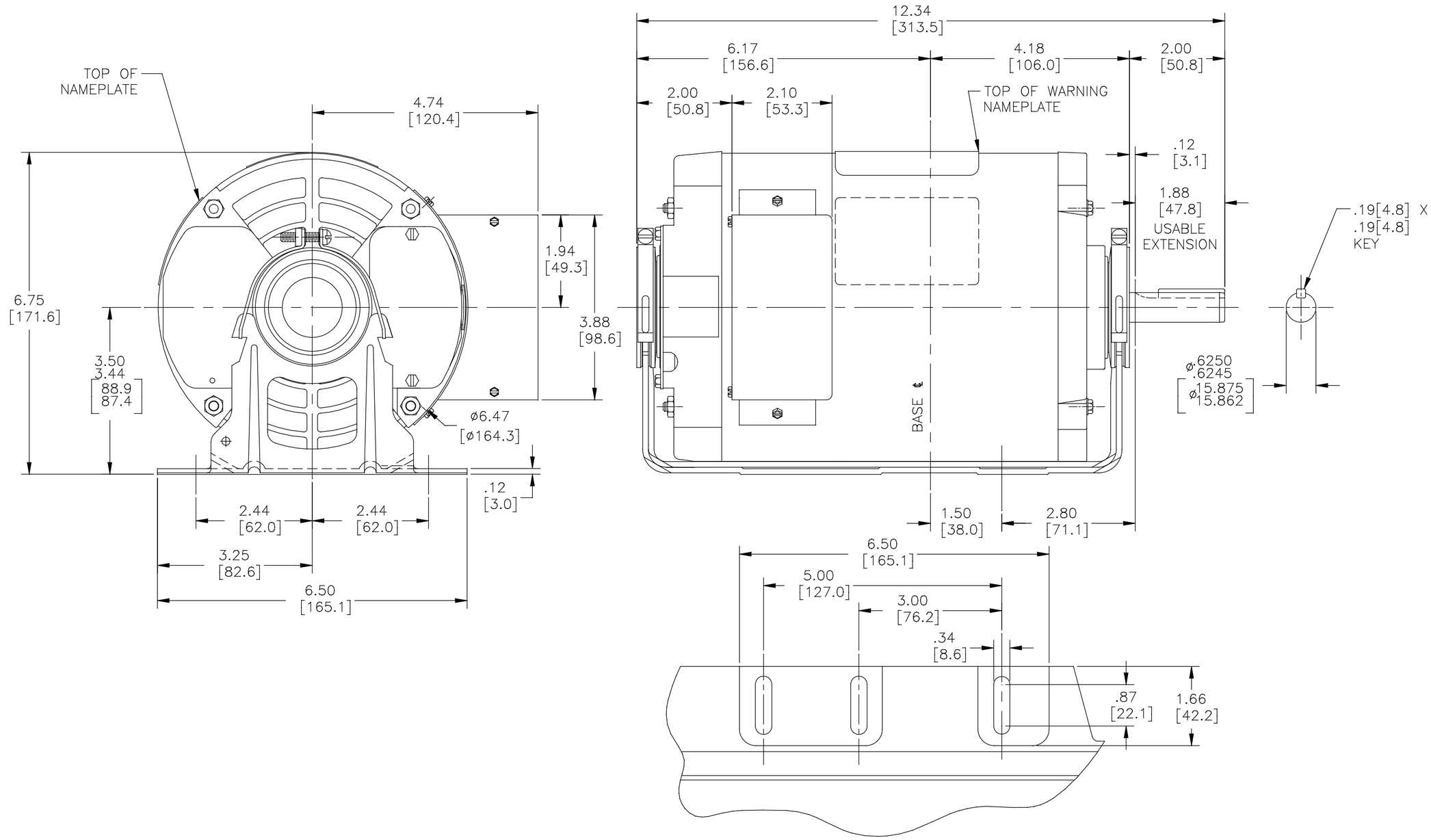

BREAKAWAY BOTTOM VIEW OF BASE

DRAWING REVISION C	REVISION BY J.RUIZ	DATE 06-15-2015	
ECO 0079027	APPROVED BY J.RUIZ	DATE 06-15-2015	
ECO DESCRIPTION SEE ECO			

COPYRIGHT REGAL BELOIT AMERICA, INC. ALL RIGHTS RESERVED. PROPRIETARY AND CONFIDENTIAL INFORMATION — THIS DOCUMENT IS THE PROPERTY OF REGAL BELOIT AMERICA, INC. ("OWNER") AND CONTAINS OWNER'S PROPRIETARY INFORMATION. ANY PERSON, CORPORATION OR OTHER FIRM RECEIVING IT IS DEEMED, BY RECEIVING IT, TO AGREE THAT IT, AND/OR ANY PART OF IT, SHALL NOT BE DISCLOSED TO ANY PERSON, CORPORATION OR OTHER ENTITY, DUPLICATED, AND/OR USED, EXCEPT AS EXPRESSLY APPROVED IN WRITING IN ADVANCE BY OWNER. THIS DOCUMENT SHALL BE RETURNED TO OWNER UPON REQUEST. IT MAY BE SUBJECT TO CERTAIN RESTRICTIONS UNDER APPLICABLE EXPORT CONTROL LAWS AND REGULATIONS.

TOLERANCES UNLESS OTHERWISE SPECIFIED

DEC.	INCH	mm	ANGLE
.X	±0.1	[±2.5]	±0.5°
.XX	±0.02	[±0.51]	
.XXX	±0.005	[±0.127]	
.XXXX	±0.0005	[±0.0127]	

REMOVE BURRS & BREAK SHARP EDGES .003/.015 [.076/.381]
CORNER FILLETS .02 [.51]
MACHINED SURFACES INCH 125 mm 3.2
mm SHOWN IN [BRACKETS]

DRAWN BY:	L.GRADO
DATE:	10-21-2011
APPROVED BY:	T.COLOMA
DATE:	10-21-2011
REFERENCE	.
THIRD ANGLE PROJECTION	

Regal Beloit America, Inc.

DESCRIPTION: MODEL-CFHP-56FR OUTLINE

MATERIAL: . PROCESS/FINISH: .

SIZE C | DWG NO RB3204 | SHEET 1