Uncontrolled Copy

CUSTOMER IS SOLELY RESPONSIBLE FOR MOTOR PERFORMANCE AND SUITABILITY IN APPLICATIONS FOR CUSTOMER'S USES.

DE2D7153N

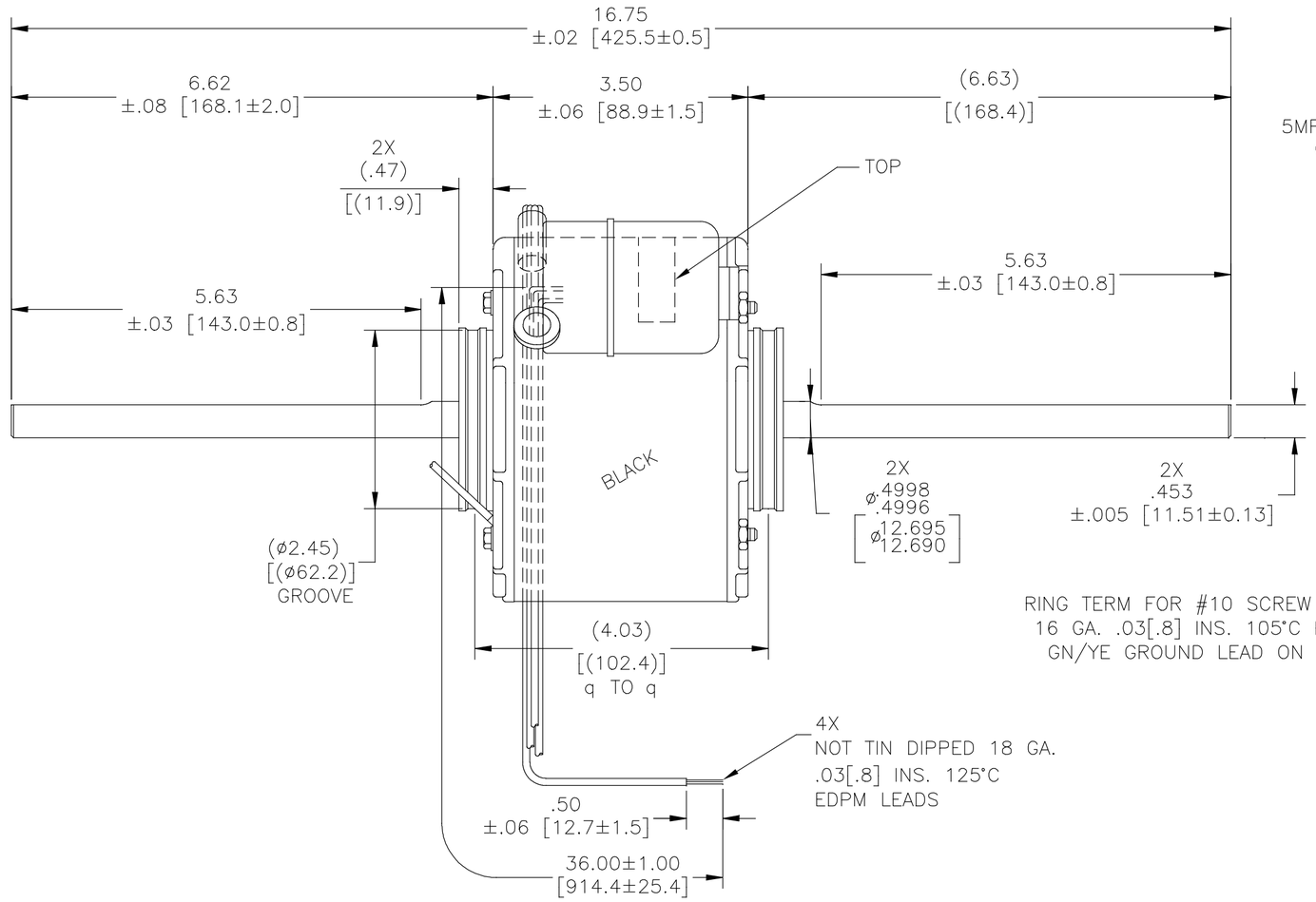

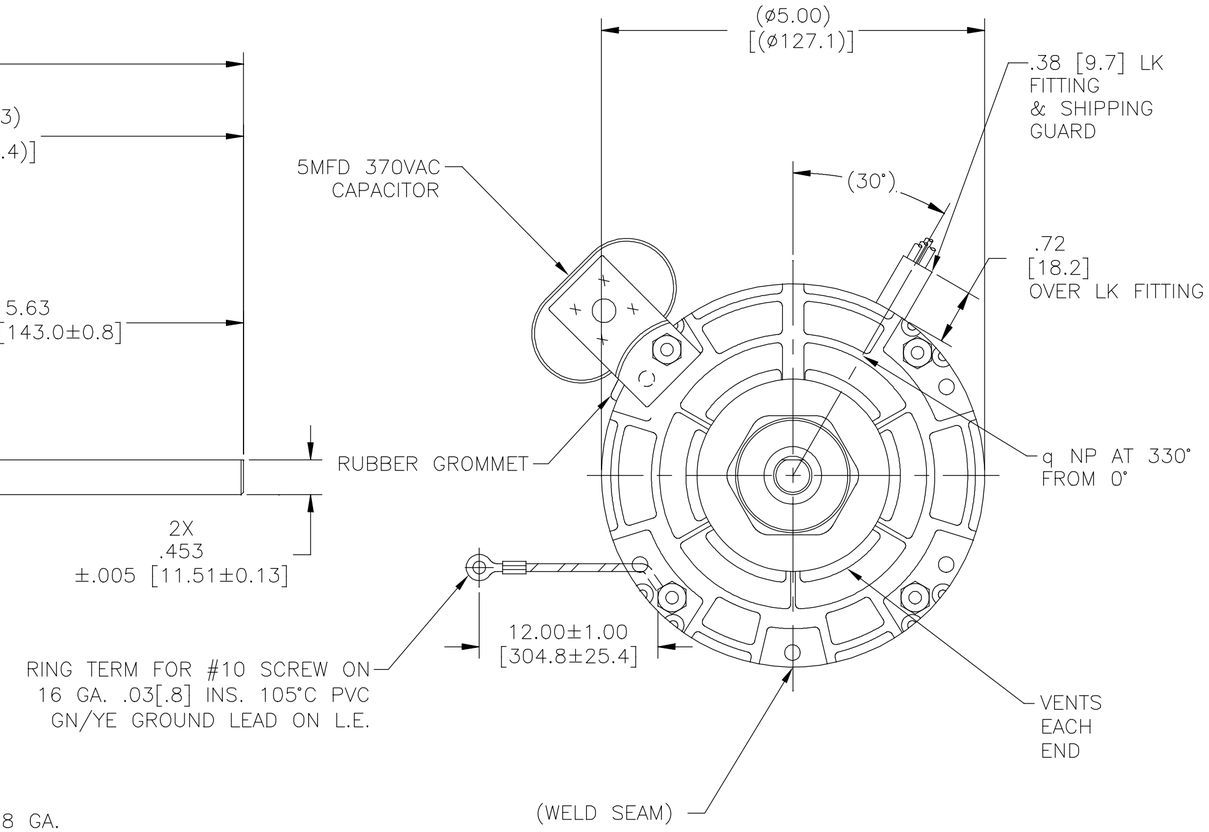

ROT.:– CWLE

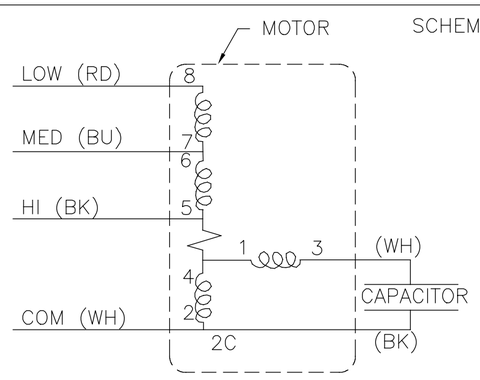

NAMEPLATE DATA:

Century® Tipp City, OH THERMALLY PROTECTED

SER. DATE & PO# PLT LTR MOD DE2D153N STOCK NO. 382
VOLTS 115 HZ 60 AMPS .73
RPM 1625 SP PH 1 CAP
INS CL AMB °C HP CONT AO ROTATION
BRG SLV
BK HI .73A 1/25HP
BU MED .49A 1/40HP
RD LOW .37A 1/50HP
WH COM
ASSEMBLED IN MEXICO

ELECTRICALLY PER
SAMPLE S–9318D

NOTES:
1. ENDPLAY .005[.13] MIN – .040[1.02] MAX
2. MAXIMUM SHAFT RUN OUT .001[.03] PER 1.00[25.4].
3. MAXIMUM RUN OUT NOT TO EXCEED .0075[.191]

DRAWING REVISION H	REVISION BY J.HESS	DATE 06–01–2018
ECO ECO–0144229	APPROVED BY J.HESS	DATE 06–01–2018
ECO DESCRIPTION UPDATED TITLE BLOCK		

COPYRIGHT REGAL BELOIT AMERICA, INC. ALL RIGHTS RESERVED. PROPRIETARY AND CONFIDENTIAL INFORMATION – THIS DOCUMENT IS THE PROPERTY OF REGAL BELOIT AMERICA, INC. ("OWNER") AND CONTAINS OWNER'S PROPRIETARY INFORMATION. ANY PERSON, CORPORATION OR OTHER FIRM RECEIVING IT IS DEEMED, BY RECEIVING IT, TO AGREE THAT IT, AND/OR ANY PART OF IT, SHALL NOT BE DISCLOSED TO ANY PERSON, CORPORATION OR OTHER ENTITY, DUPLICATED, AND/OR USED, EXCEPT AS EXPRESSLY APPROVED IN WRITING IN ADVANCE BY OWNER. THIS DOCUMENT SHALL BE RETURNED TO OWNER UPON REQUEST. IT MAY BE SUBJECT TO CERTAIN RESTRICTIONS UNDER APPLICABLE EXPORT CONTROL LAWS AND REGULATIONS.

TOLERANCES UNLESS OTHERWISE SPECIFIED

DEC.	INCH	mm	ANGLE
.X	±0.1	[±2.5]	±0.5°
.XX	±0.02	[±0.51]	
.XXX	±0.005	[±0.127]	
.XXXX	±0.0005	[±0.0127]	

REMOVE BURRS & BREAK SHARP EDGES .003/.015 [.076/.381] X 45°
CORNER FILLETS R.02 [.51]
MACHINED SURFACES INCH 125 mm 3.2
mm SHOWN IN [BRACKETS]

DRAWN BY:	TLB
DATE:	12–20–2000
APPROVED BY:	DTS
DATE:	–
REFERENCE	–
THIRD ANGLE PROJECTION	

REGAL™ Regal Beloit America, Inc.

DESCRIPTION: MODEL–RFHP–42FR OUTLINE

MATERIAL: – PROCESS/FINISH: –

SIZE C | DWG NO DE2D7153 | SHEET 1