WORLDWIDE ELECTRIC MOTOR DATA SHEET

IXPEWWE60-12-404T

HORSEPOWER	**60**		
RPM / POLES	**1200 / 6**		
VOLTAGE / PHASE	**230 / 460 V / 3**		
FRAME	**404T**		
ENCLOSURE / DEGREE OF PROTECTION	**TEFC / IP55**		
FREQUENCY	**60 HZ Suitable For 50 HZ Operation With 1.0 SF**		
FULL LOAD SPEED	**1192 RPM**		
SERVICE FACTOR	**1.15 SF**		
INSULATION CLASS	**F**		
FULL LOAD AMPS	**138 / 69.0 A**		
LOCKED ROTOR AMPS (STARTING)	**870 / 435 A**		
NO LOAD CURRENT			
NEMA CODE LETTER	**G**		
EFFICIENCY / POWER FACTOR	LOAD	EFF.	P.F.
	100%	**94.5%**	**0.83**
	75%	**94.5%**	**0.86**
	50%	**94.1%**	**0.79**
DUTY CYCLE	**S1 / Continuous**		
TORQUE	FULL LOAD	LRT	BDT
	264 lb.ft.	**135%**	**200%**
SLIP	**0.67%**		
NEMA DESIGN	**B**		
MOMENT OF INERTIA			
NUMBER OF STARTS (Hot / Cold)	**1 Hot / 2 Cold (Per Hour)**		
MAX. AMBIENT TEMPERATURE	**40° C**		
MAX. ELEVATION	**3300 Ft. Above Sea Level**		
TEMPERATURE RISE (At Full Load)	**80° C**		
DE BEARING	**6316**		
ODE BEARING	**6314**		
GREASE TYPE	**Mobil Polyrex EM**		
MOUNTING	**F1**		
ROTATION	**Bi-Directional**		
APPROXIMATE WEIGHT	**1188 lbs.**		
TEMPERATURE CODE AT 40°C AMBIENT	**T3C**		
TEMPERATURE CODE AT 55°C AMBIENT	**T2C**		
AREA CLASSIFICATION	**Class I, Division I, Groups C & D**		
	Class II, Division I, Groups F & G		
INVERTER RATING	**5:1 CT / 10:1 VT PWM Type**		

E301984 C US EEV 232036 CC039B

November 30, 2016

WORLDWIDE ELECTRIC MOTOR DRAWING

IXPEWWE-404T

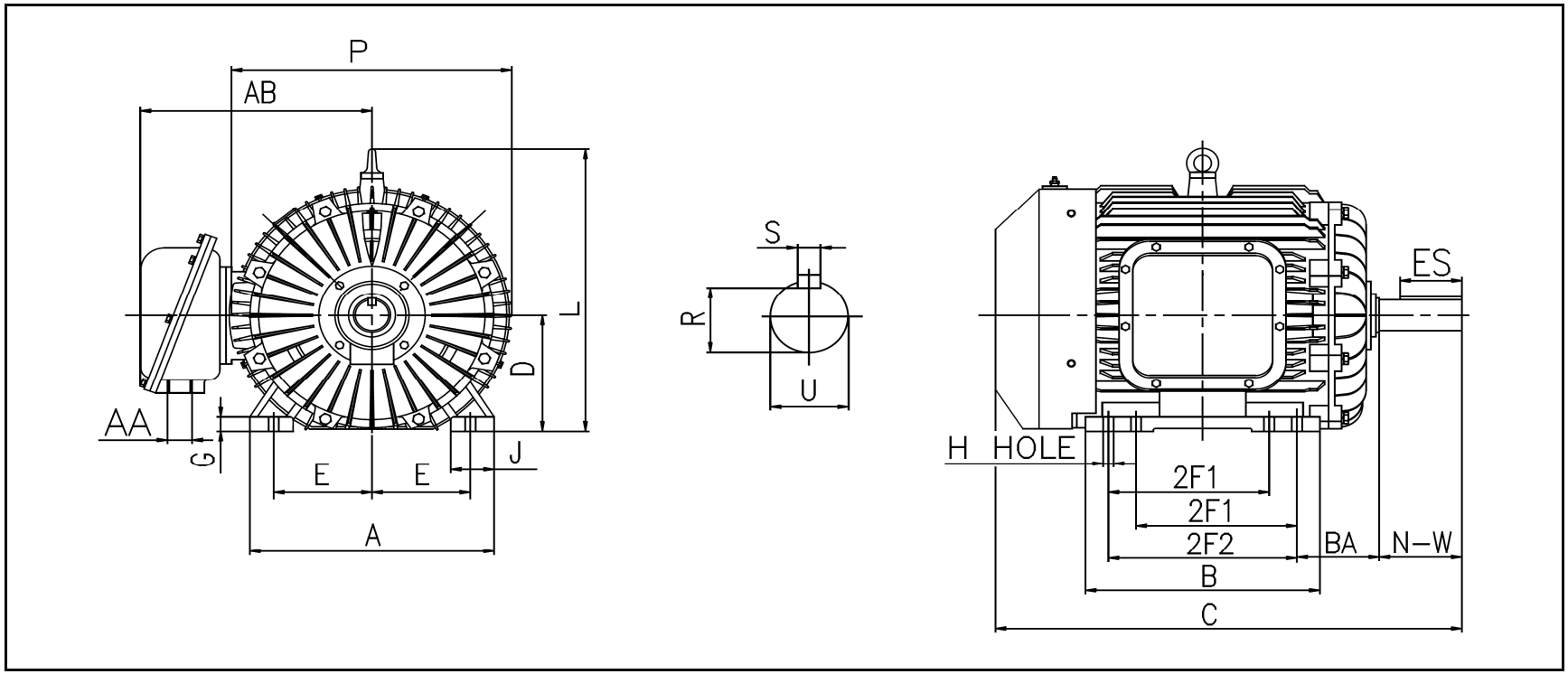

MOUNTING										
E	2F1	2F2	H	BA	A	B	C	D	G	J
8	12.25	13.75	0.81	6.62	19.1	17	38.6	10	1.18	3.15

				KEY		KEYSEAT	SHAFT	
L	P	AA	AB	ES	S	R	N-W	U
25	21.8	3	18.7	5.71	0.75	2.45	7.25	2.875

ALL DIMENSIONS IN INCHES

REVISED - 09/16/16