CONTROL SURFACES & DIMENSIONS
(P) PROC.
(E) ENG.
(A) APPL.
(R) REG.

52A113052

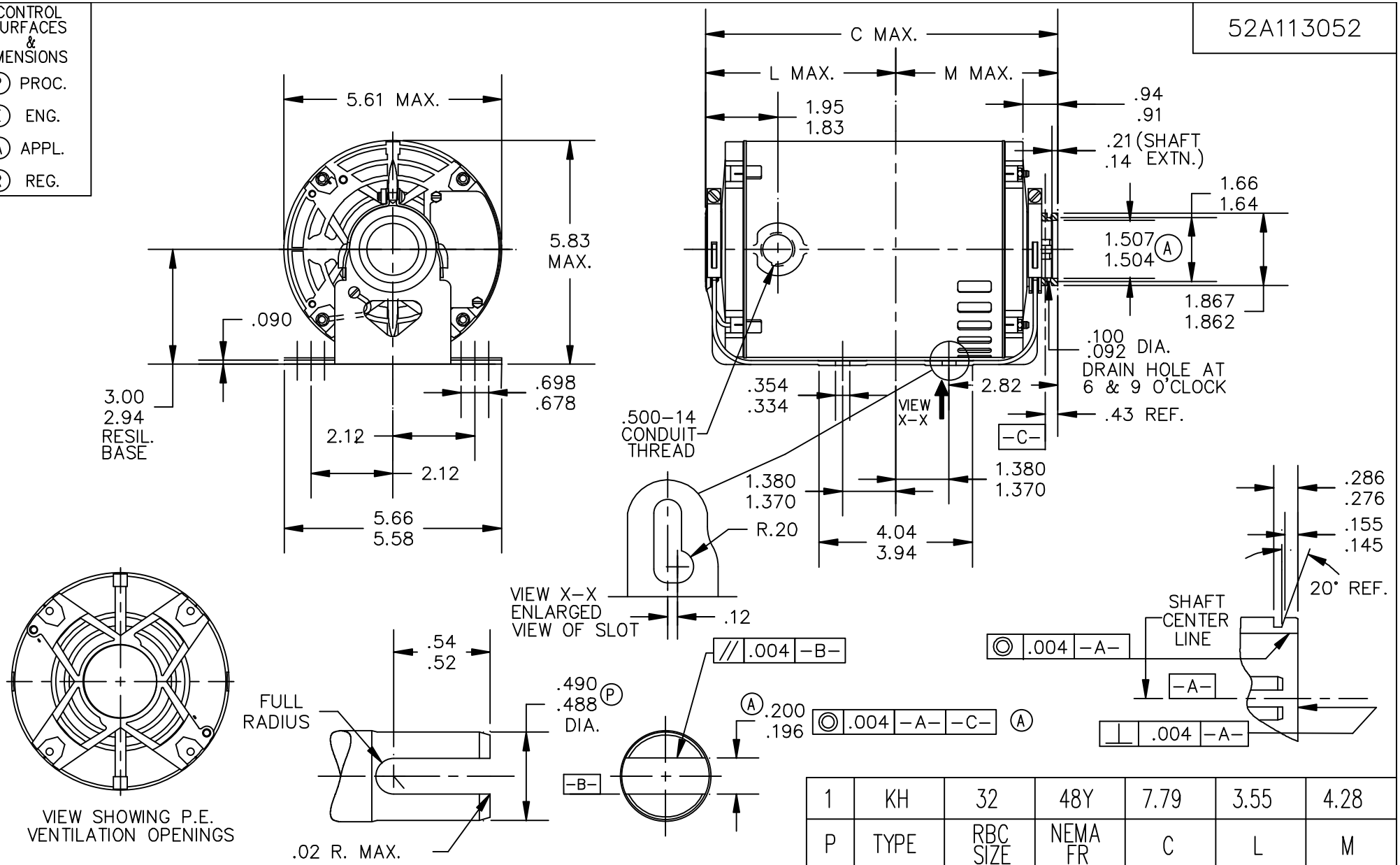

1	KH	32	48Y	7.79	3.55	4.28
P	TYPE	RBC SIZE	NEMA FR	C	L	M

NO.	REVISION	BY & DATE	CHK
3	PART # 2 DELEATED AS PER IS12–4648	UD 9/26/12	KK
2	CHG GD LD FROM 4:30 TO 7:30 PER IS11–0510.	UD 9/24/12	PKG
1	ADDED CORE SET TO PART #2.	KK 13/03/12	

TOLERANCES UNLESS SPECIFIED

DEC.	INCHES
.X	±0.1
.XX	±0.02
.XXX	±0.005
.XXXX	±0.0005
ANG	±1.0

REGAL BELOIT — REGAL-BELOIT CORPORATION

TITLE: OUTLINE
CARBONATOR PUMP – OPEN – RESIL. BASE

MAT'L.
FINISH
CAD FILE 52A113052
RFP
DIST

DRAWN GD 10/25/05
CHK
APPD GD 10/25/05
SCALE 1=1
REF
FMF
PREV

SIZE A
DRAWING NO. 52A113052
REV. 3