TYPE	OUTPUT		POLE	TIME RATING	VOLTAGE V	Hz	SYN.SPEED R.P.M
	HP	KW					
AEJHTK	1000	746	6	CONT.	2300/4160	60	1200

TOTALLY ENCLOSED FAN COOLED TYPE. SQUIRREL CAGE ROTOR

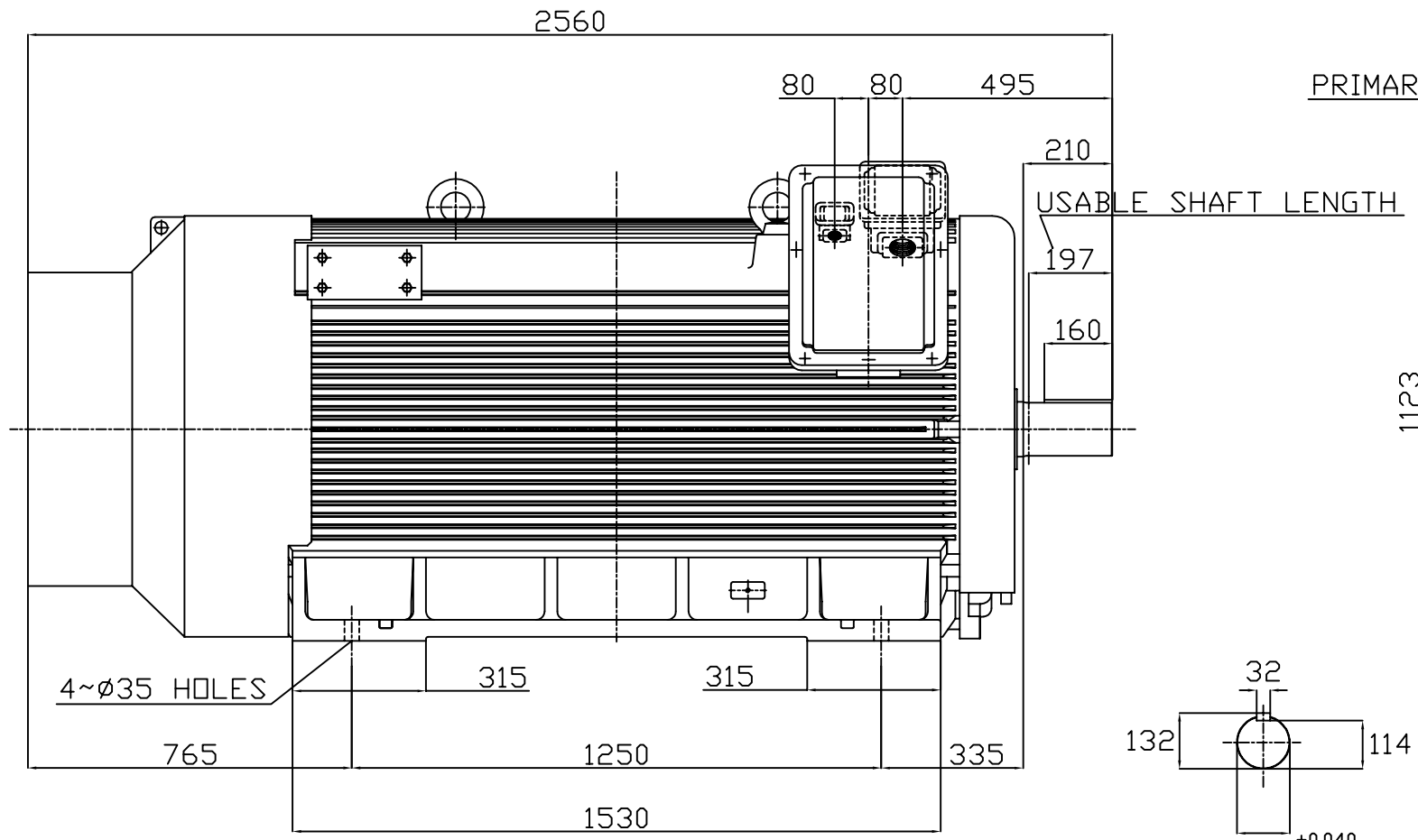

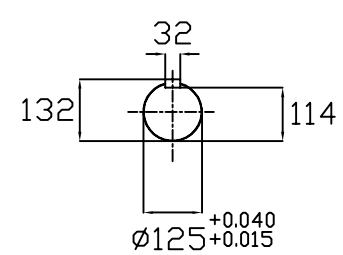

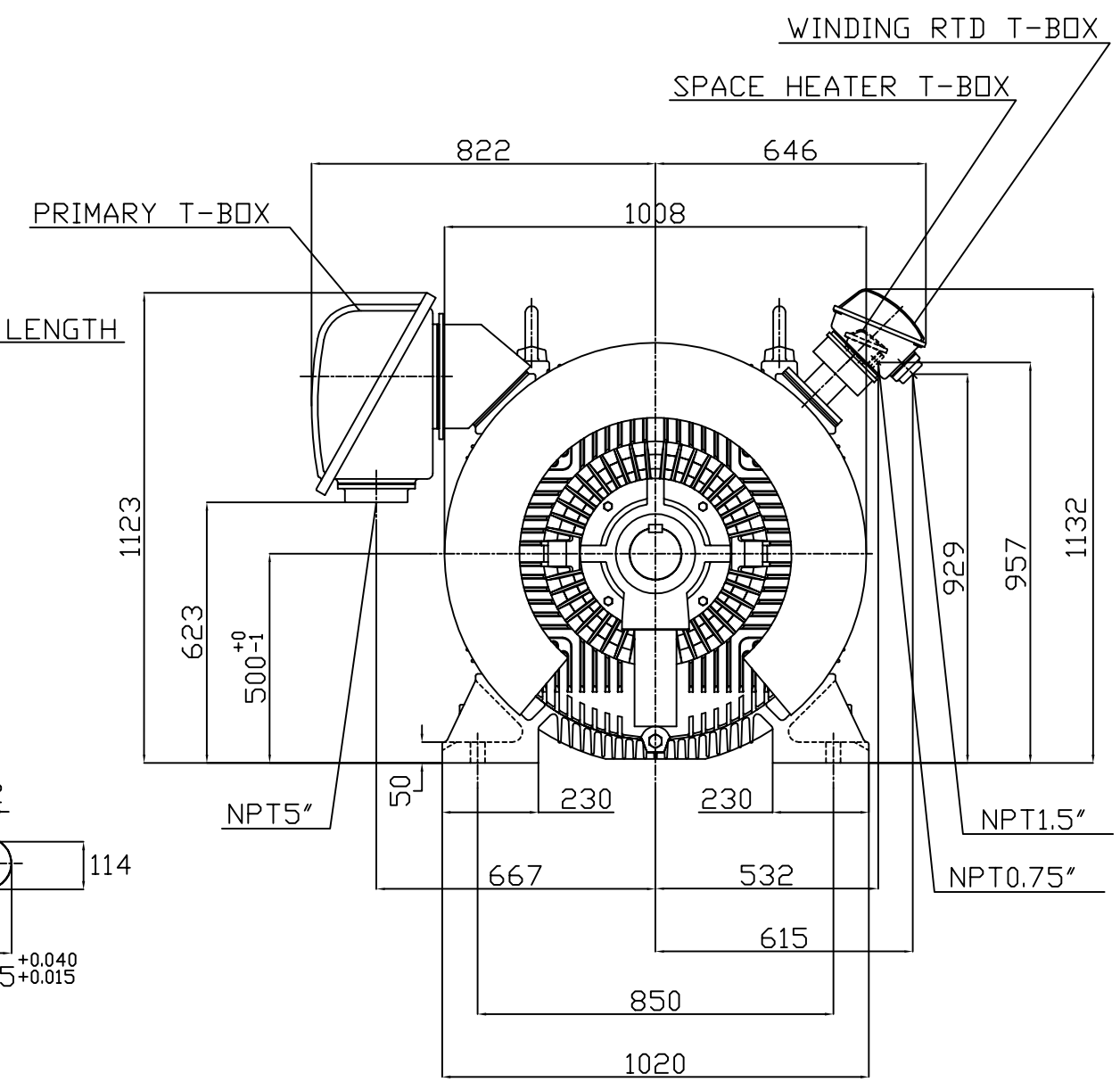

1. DIMENSIONS IN MM
2. FRAME NO. 500C
3. F CLASS INSULATION
4. FOR DIRECT FLEXIBLE COUPLING
5. WITH SPACE HEATER 120 VOLT SINGLE PHASE 400 WATTS
6. WITH 100 OHM PLATINUM WINDING RTD'S 2/PHASE
7. BEARING SIZE: DRIVE END: 6326
   NON-DRIVE END: 6324M/C3 VL024
8. MOTOR APPROX. WEIGHT: 5100 KGS

TW-66C

DWN.	W.L.LIN	APR·22·2003
CHKD.	W.L.LIN	APR·22·2003
APPD.	C.WANG	APR·22·2003

DATE MAY 7, 2004

CATALOG NO. JH10006

OUTLINE DIMENSIONS

3-PHASE INDUCTION MOTOR

TECO Westinghouse

DWG NO. 3A040T4091 REV: 00