SS65051

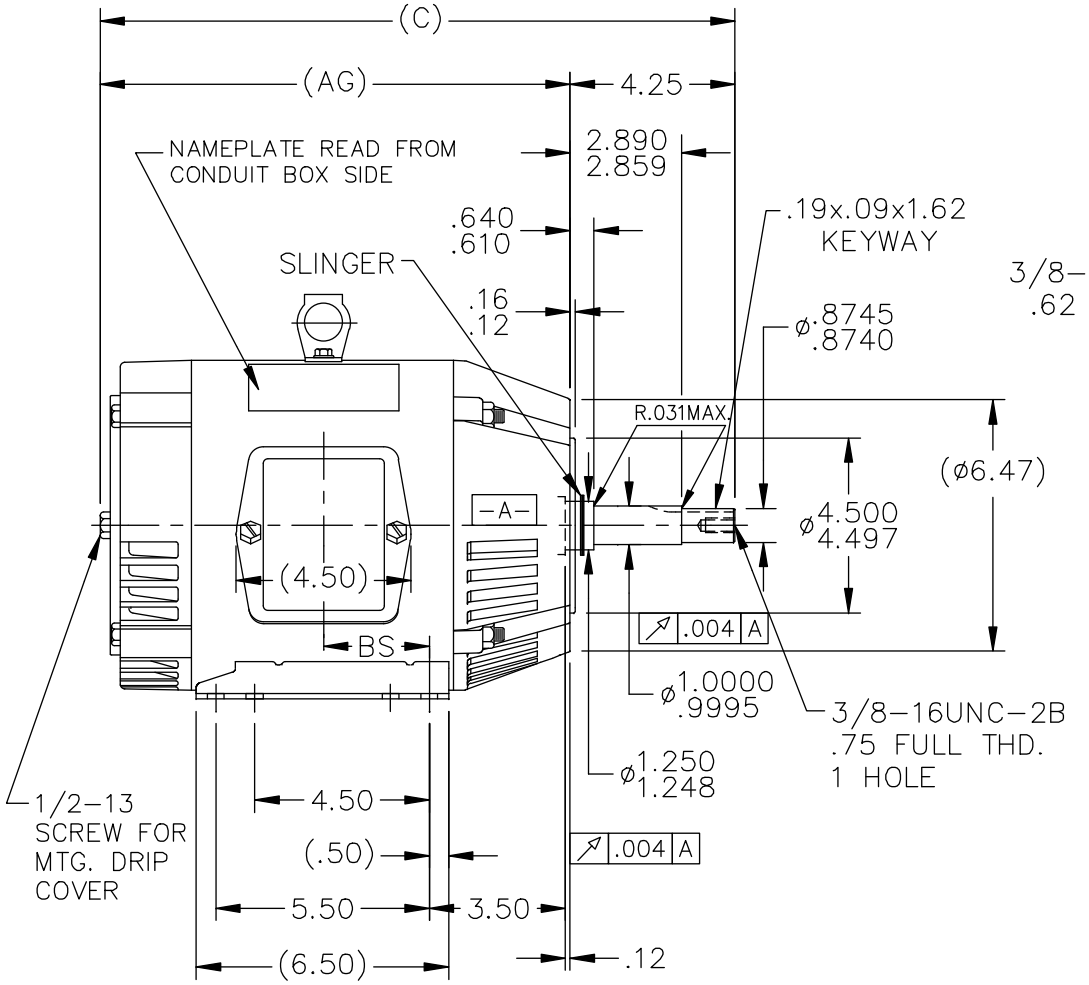

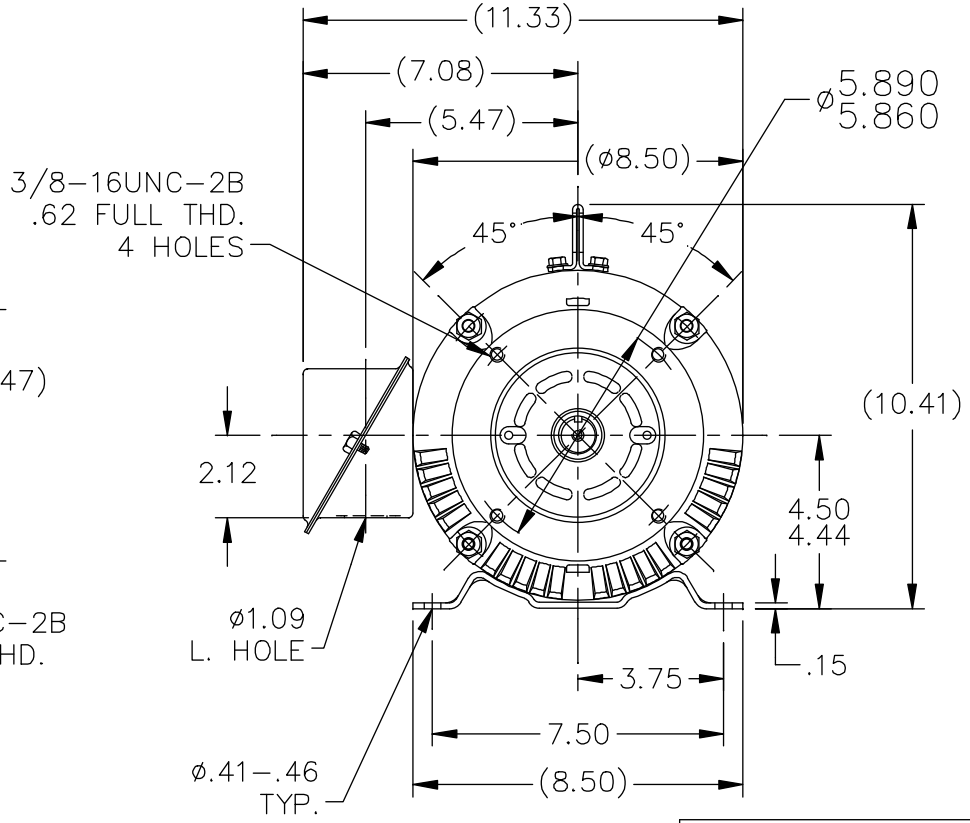

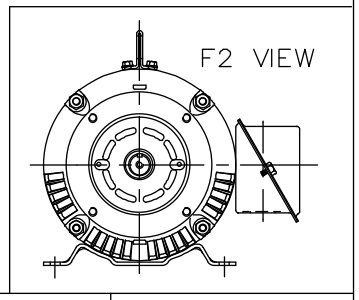

DASH	FR.	C	AG	BS	MOUNTING
575	182JM	15.35	11.10	2.25	F1 OR F2
675	182/84JM	16.35	12.10	2.75	F1 OR F2
775	182/84JM	17.35	13.10	3.25	F1 ONLY

BOX CAN BE ROTATED IN 90° STEPS.
BOX CAN BE MOUNTED ON OPPOSITE SIDE BY REMOVING BRACKETS AND TURNING FRAME 180°.

NO.	REVISION	BY & DATE	CHK
18	UPDATED DRAWING	RJW 04-20-2007	
17	-675 & 775 NOW 182/84JM FRAMES CN 31857	DRS 11-01-2002	ML
16	ADDED FORMED LIFT LUG CN 34025	HLB 06-29-2001	
15	ADDED MOUNTING TYPE CN 27451	DRS 04-29-1999	
14	REMOVED EYEBOLT	BLR 11-09-1995	
13	ADDED NEW BASE CN 14442	RM 06-24-1994	

TOLERANCES UNLESS SPECIFIED

DEC.	INCHES
.X	±.1
.XX	±.03
.XXX	±.005
.XXXX	±.0005
ANG	±7'30"

MARATHON ELECTRIC

TITLE OUTLINE
180T FR. – BB – TS – DR.PR. – C'FACE

MAT'L.
FINISH
CAD FILE ss65051
RFP
DIST LB

DRAWN DJK 12-15-1992
CHK ML 12-16-1992
APPD GK 12-16-1992
SCALE 1=5
REF
FMF
PREV

SIZE A | DRAWING NO. SS65051 | PAGE OF | REV. 18