Dimensões em polegada
Dimensions in inches

THIS IS AN UPDATED REVISION, THE PREVIOUS ONE MUST BE DISREGARDED.

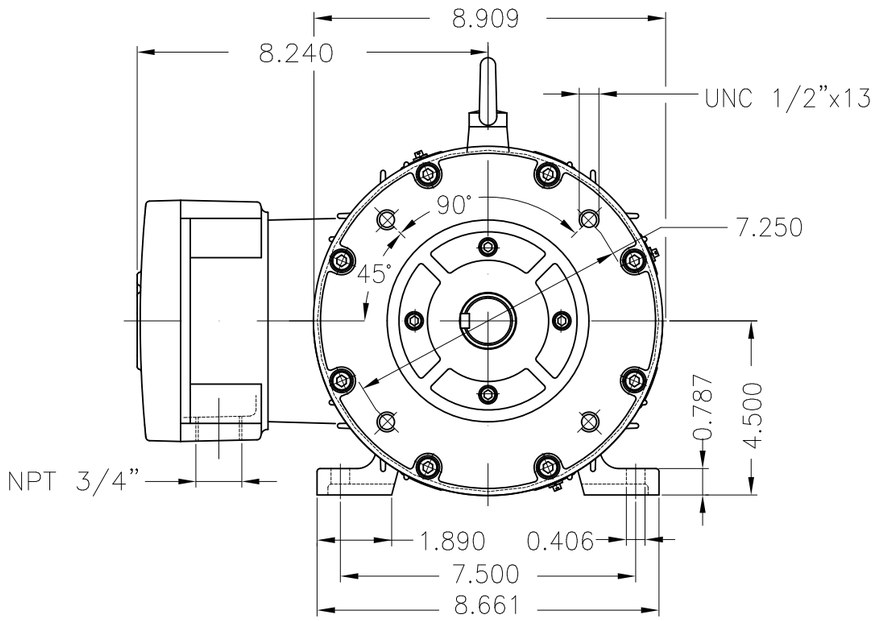

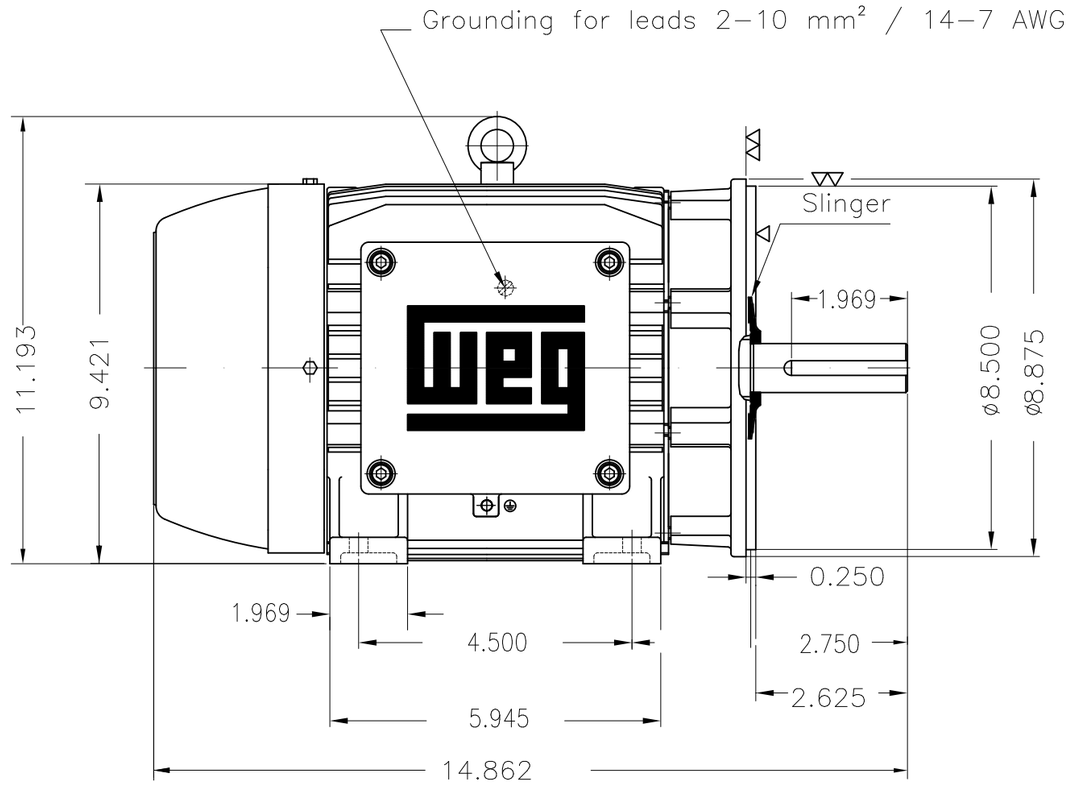

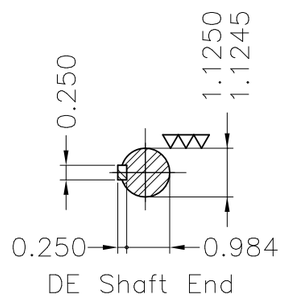

Color RAL 5009
Painting plan 202P
Mounting B34R(D)

ECM	LOC	SUMMARY OF MODIFICATIONS	EXECUTED	CHECKED	RELEASED	DATE	VER

EXECUTED	USERADMIN	THREE PHASE EXPL. PROOF MOTOR NEMA P.EFF	
CHECKED		FRAME 182TC IP55 TEFC	
RELEASED		WEG code: 12408938	
REL DT	24.07.2017	WMO	Jaragua do Sul	Product Engineering	SHEET 1 / 1

1.5 HP 06 Poles 60Hz

A

ZME A3

WEG's property. Forbidden reproduction without previous authorization.