SHEET | REV 9 | 52A107695 | DRAWING NO. | SIZE A

THIRD ANGLE PROJECTION

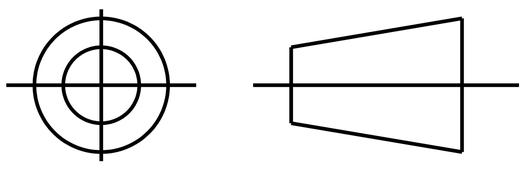

REVISIONS

REV.	DESCRIPTION	DATE	APPROVED
7	CHG TO RBC FORMAT PER IS05-1777	03/01/06	SUDHA
8	CHANGED AS PER ISAAC 06-0708	03/04/06	POONAM
9	ADDED "WATER SLINGER" PER "IS11-5119"	12/05/2011	KOTI

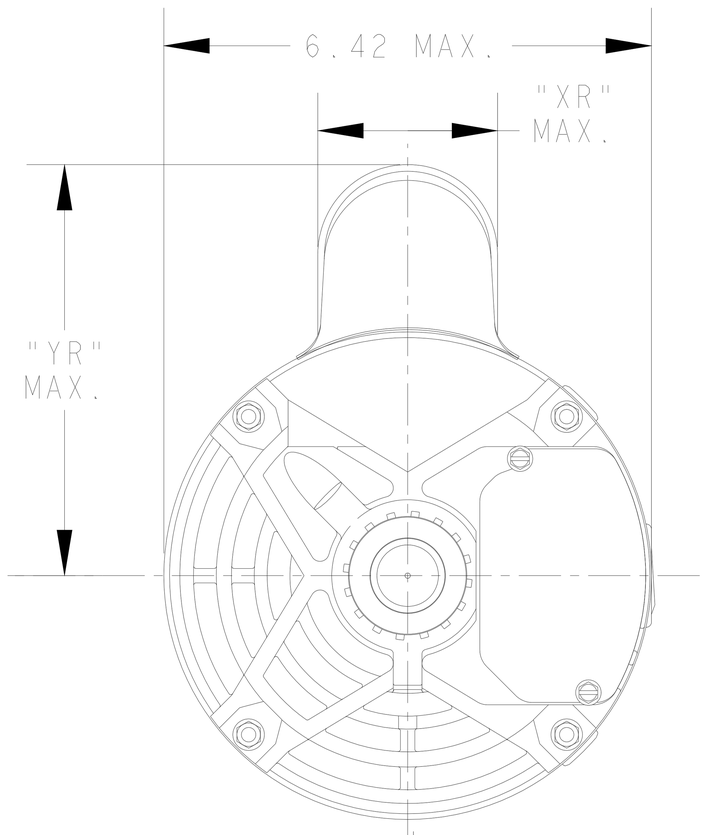

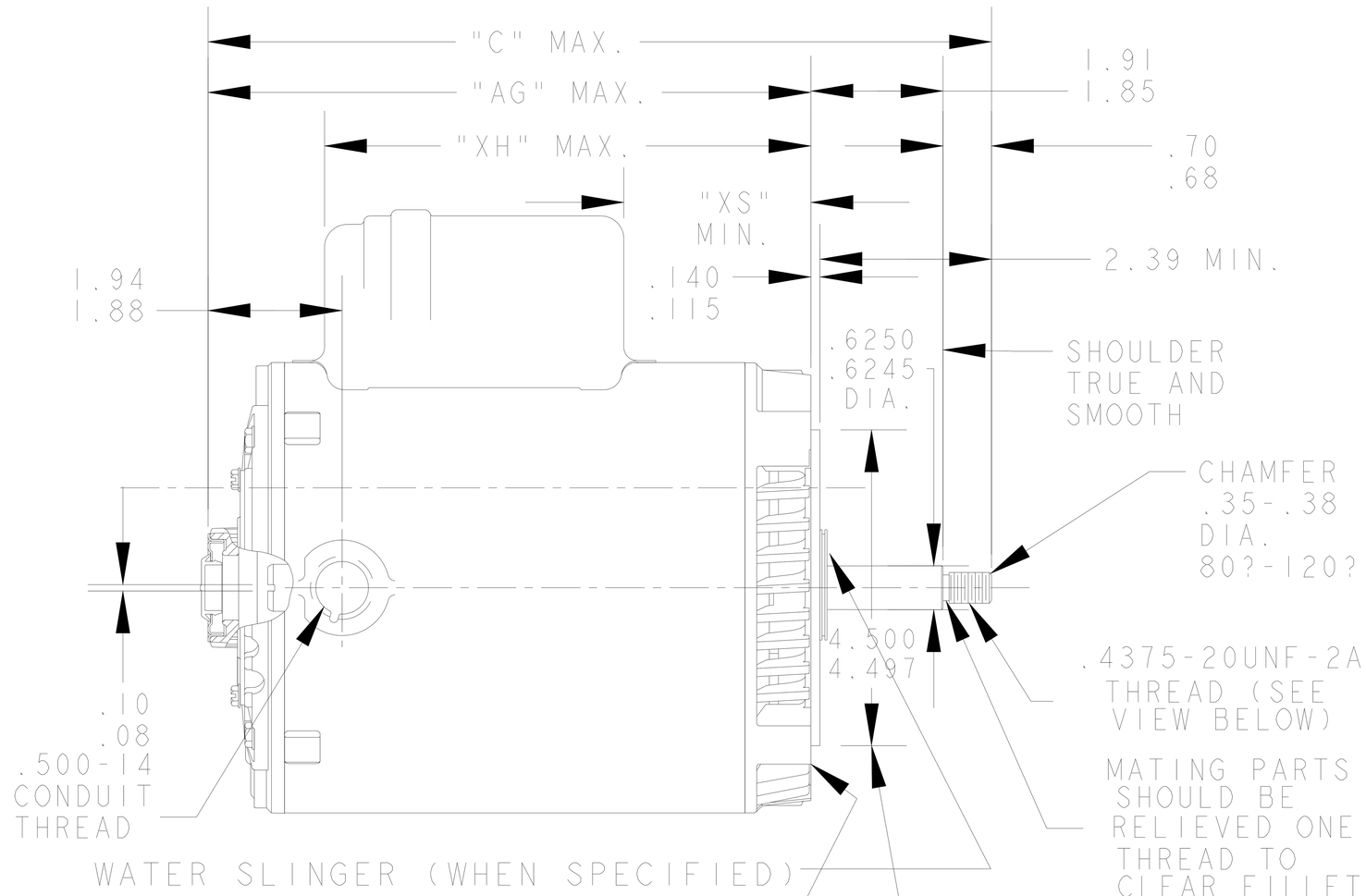

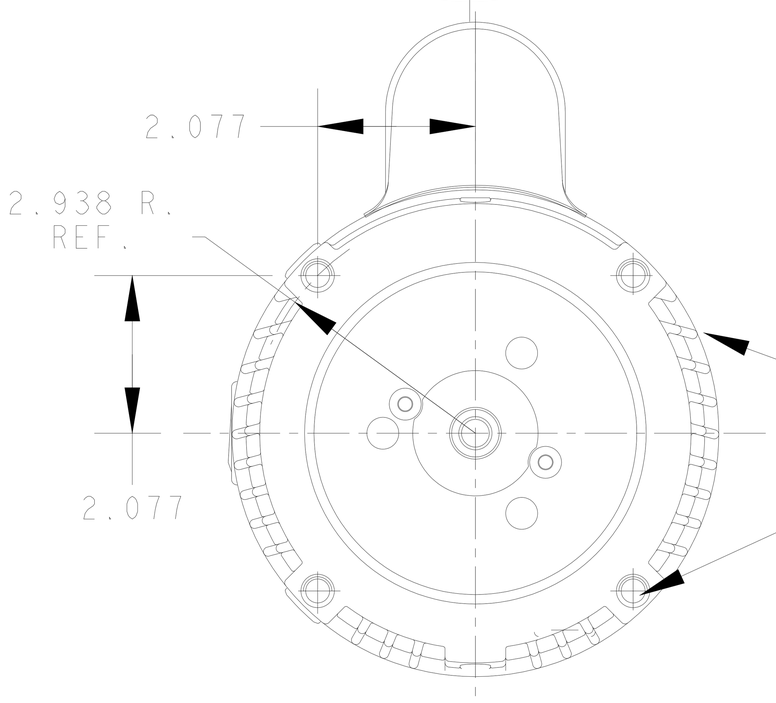

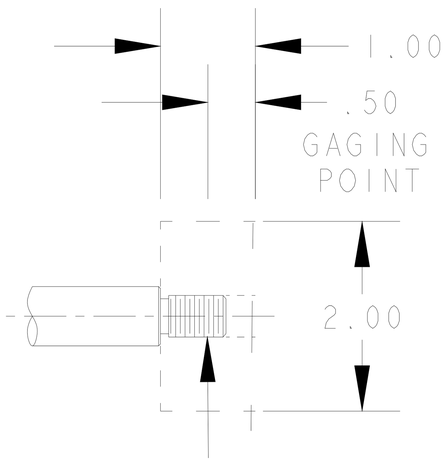

ECCENTRICITY OF THRD. PORTION OF SHAFT IS HELD WITHIN .004 TOTAL GAGE READING WITH THE INDICATOR ON THE O.D. OF THE GROUND RING GAGE AS SHOWN. THE GAGE BEING STATIONARY WITH RESPECT TO THE ROTOR.

P	TYPE	GE SIZE	NEMA FR.	"C"	"AG"	"XH"	"YR"	"XR"	"XS"		MIN. SHELL
5	KC	49	56J	11.99	9.36	7.76	5.44	2.40	2.01		7.15
4	KC	49	56J	11.89	9.26	7.66	5.44	2.40	1.91		7.15
3	KC	49	56J	10.89	8.26	6.66	5.44	2.40	2.12		6.15
2	KC	42	56J	10.46	7.83	6.23	5.44	2.40	1.69		5.72
1	KC	46	56J	11.29	8.66	7.06	5.44	2.40	2.52		6.55

SIGNATURES		DATE
MODEL	M.D.P.	06/19/91
DETAIL	.	.
CHECKED	.	.
ENGRG	.	.
MFG	.	.
QUALITY	.	.
ISSUED	M.A.M.	06/14/94

FOR ADDITIONAL INFO REFER TO:
APPLIED PRACTICES .
DIMENSIONS ARE IN INCHES
MATERIAL .
SOLID MODEL: 52A107695

REGAL BELOIT

REGAL-BELOIT CORPORATION

TITLE

OUTLINE

JET PUMP MOTOR DRIP PROOF - BALL BEARING
R2 END MOUNTED FMF - 40 FRAME REDESIGN

SIZE A | DRAWING 52A107695 | REV 9

SCALE: 0.250 | REF. No: . | SHEET 1 OF 1