TYPE	OUTPUT		POLE	TIME RATING	VOLTAGE V	Hz	SYN.SPEED R.P.M
	HP.	kW.					
AEHE	700	522	6	CONT.	460	60	1200

TOTALLY ENCLOSED FAN-COOLED TYPE, SQUIRREL-CAGE ROTOR

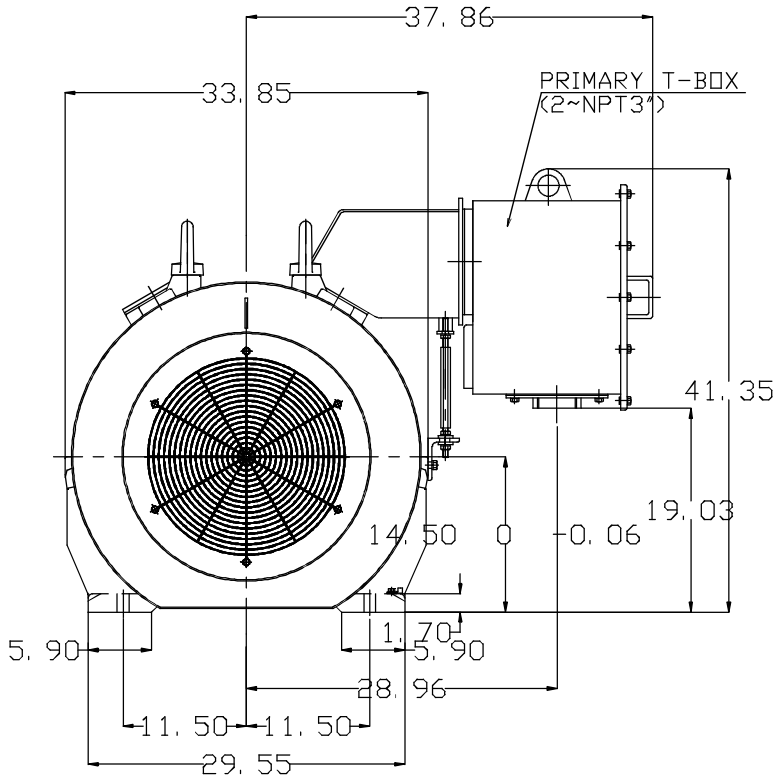

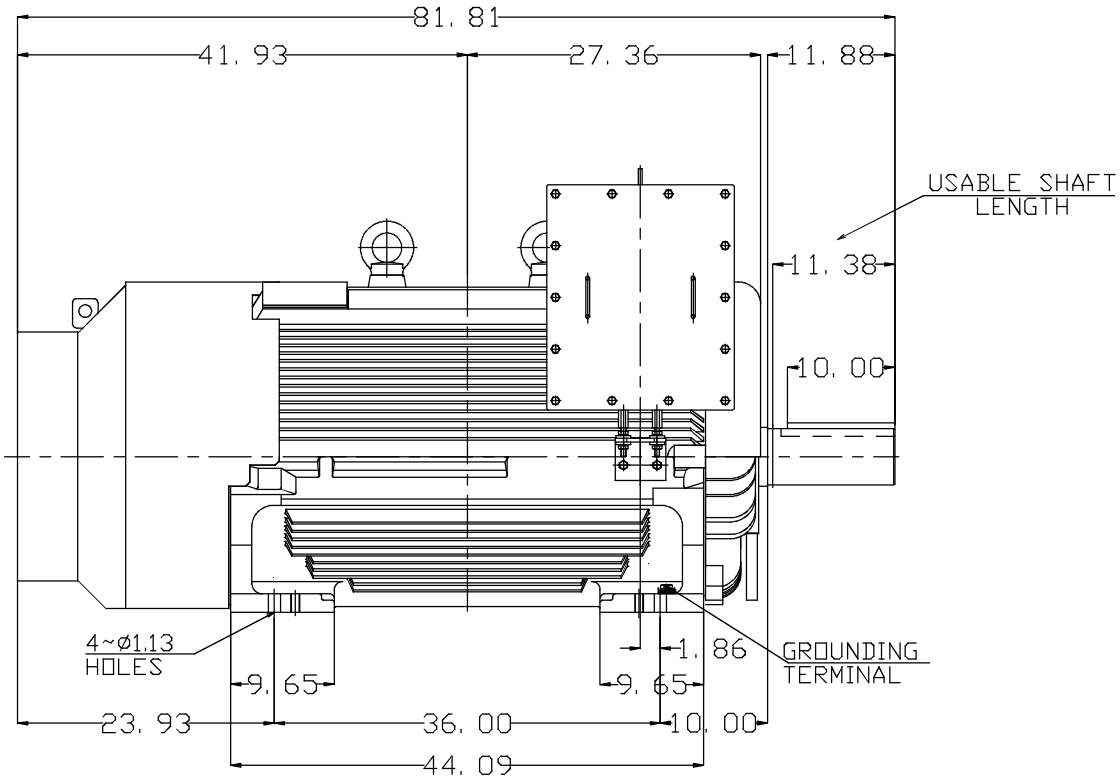

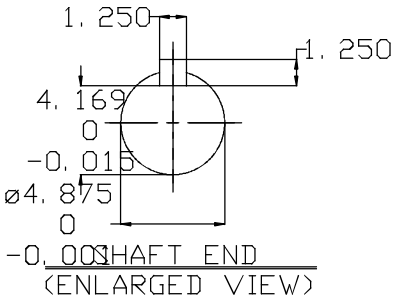

NOTE:
1. DIMENSIONS IN inch
2. FRAME NO. 5810C
3. F CLASS INSULATION, S.F.1.15
4. FOR BELT DRIVE APPLICATIONS
5. ENCLOSURE: IP55
6. BEARING SIZE: DRIVE-END NU326C3
   OPP. DRIVE-END 6322
7. MOTOR APPROX. WEIGHT: 6900 lb

DWN.	Y.DU	MAR·24·2014
CHKD.	W.CHENG	MAR·29·2014
APPD.	C.SHIH	MAR·29·2014

DATE

CATALOG # E7006R

OUTLINE DIMENSIONS

3-PHASE INDUCTION MOTOR

TECO Westinghouse

DWG NO. 4B040C044 REV:00