SS200036

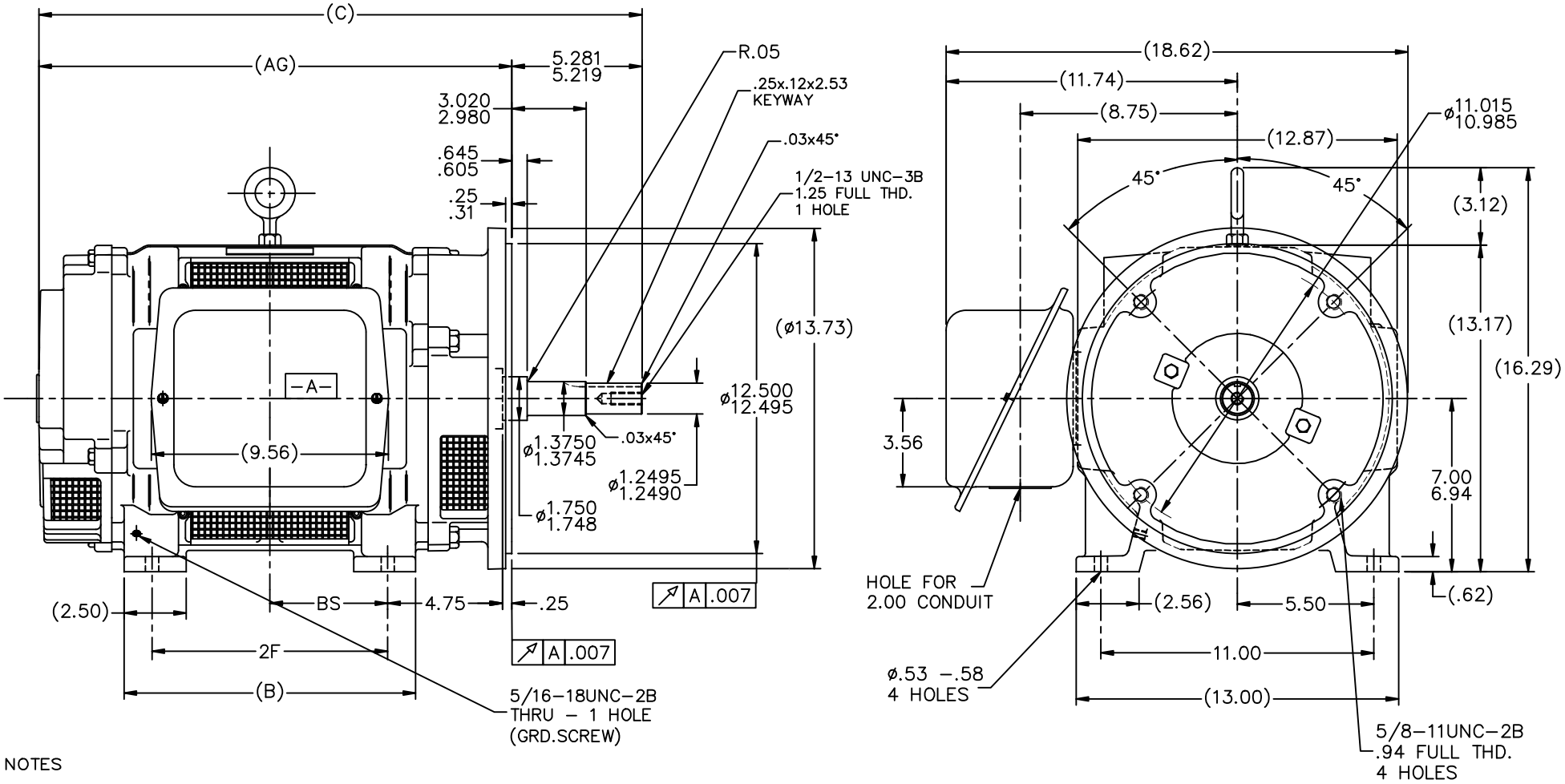

NOTES

1. BOX CAN BE ROTATED IN 90° STEPS
2. BOX CAN BE MOUNTED ON OPPOSITE SIDE BY REMOVING BRACKETS AND TURNING FRAME 180°
3. NAMEPLATE TO BE READ FROM CONDUIT BOX SIDE OF MOTOR

DASH	FRAME	B	C	2F	AG	BS
1275	284JM	11.75	24.31	9.50	19.06	4.75
1425	286JM	13.25	25.81	11.00	20.56	5.50

NO.	REVISION	BY & DATE	CHK	ANG
8	CORRECTED RUN OUT ON FLANGE WAS .004 ECN19278	MOL 03-08-2011		
7	REVISED DRAWING	RJW 04-04-2007		
6	REDRAWN IN AUTOCAD	TAT 07-06-2004	ML	
5	REVISED TO NEC CONDUIT BOX CN 28428	NJS 02-10-2000		
4	REAR BRACKET O.D. WAS 13.88 CN 25336	MJD 03-12-1999		
3	CLARIFIED TO SHOW GROUND HOLE IN FOOT CN 22833	PGK 08-14-1996		

TOLERANCES UNLESS SPECIFIED

DEC.	INCHES
.X	±.1
.XX	±.03
.XXX	±.005
.XXXX	±.0005
ANG	±7'30"

MARATHON ELECTRIC

TITLE OUTLINE – DR.PR. – CAST IRON
280JM FR. – BB – TS – DBL. END VENT.

MAT'L.

FINISH

CAD FILE ss200036

RFP

DIST LB

DRAWN DA 01-06-1992
CHK JL 01-06-1992
APPD GK 01-06-1992
SCALE 1=4
REF
FMF
PREV

SIZE	DRAWING NO.	PAGE OF	REV.
B	SS200036		8

THIS DRAWING IN DESIGN AND DETAIL IS OUR PROPERTY AND MUST NOT BE USED EXCEPT IN CONNECTION WITH OUR WORK ALL RIGHTS OF DESIGN AND INVENTION ARE RESERVED
THIS IS AN ELECTRONICALLY GENERATED DOCUMENT – DO NOT SCALE THIS PRINT