104189GE

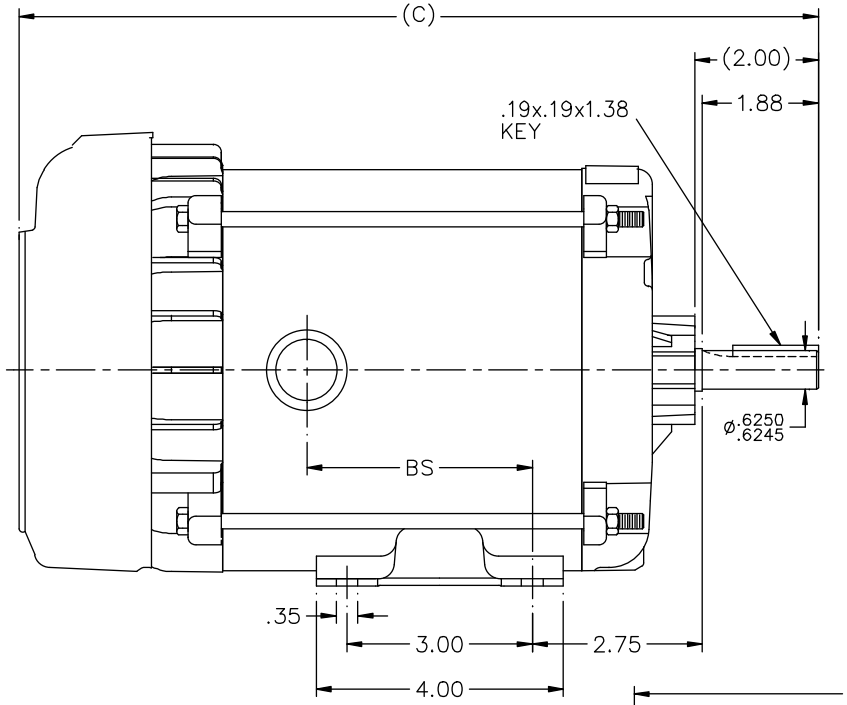

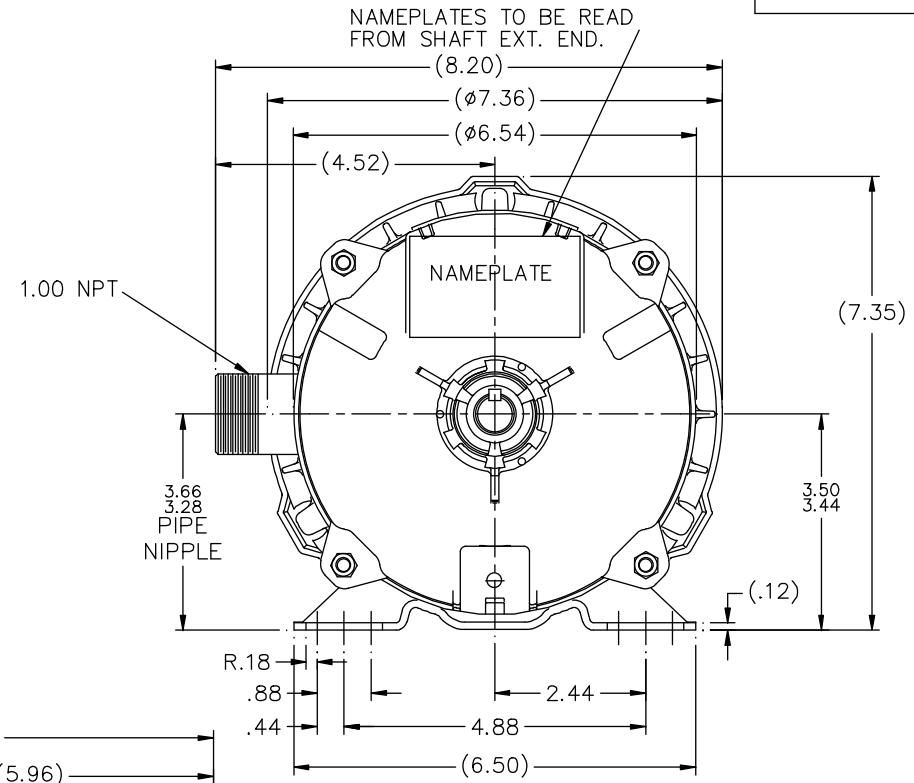

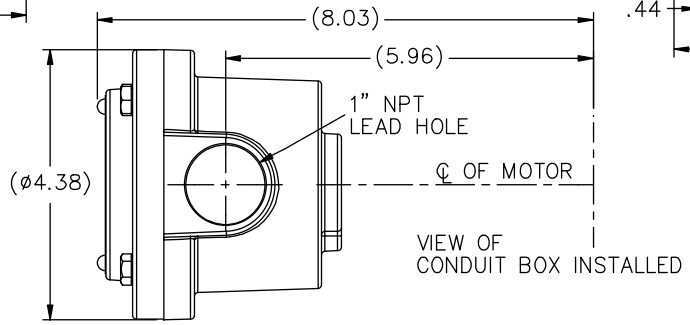

DASH	(C)	BS			
631	13.44	4.15			
681	13.94	4.65			
731	14.44	5.15			
781	14.94	5.65			
831	15.44	6.15			
881	15.94	6.65			
931	16.44	7.15			
981	16.94	7.65			

NO.	REVISION	BY & DATE	CHK
4	COND. BOX INSTALLED VIEW UPDATED PER ECR-0044571	UD 10/15/13	ST
3	REVISED C'BOX PER CN40784A	JJB 02/23/2007	ML
2	CHANGED LOGO TO REGAL BELOIT	TAT 09-07-2005	ML
1	ADD GE TO PART NO	MJK 12/20/2004	

TOLERANCES UNLESS SPECIFIED

	DEC.	INCHES
	.X	±.1
	.XX	±.03
	.XXX	±.005
	.XXXX	±.0005
ANG		±7'30"

REGAL BELOIT — REGAL-BELOIT CORPORATION

TITLE OUTLINE
56 FR. – EXP. PR. – TEFC – 1ø & 3ø

MAT'L.
FINISH
CAD FILE 104189ge

DRAWN MKELIST 11-30-04
CHK ML 01-12-05
APPD DRN 01-13-05
SCALE 1=2
REF
FMF
PREV

RFP
DIST WP

SIZE B | DRAWING NO. 104189GE | PAGE OF | REV. 4