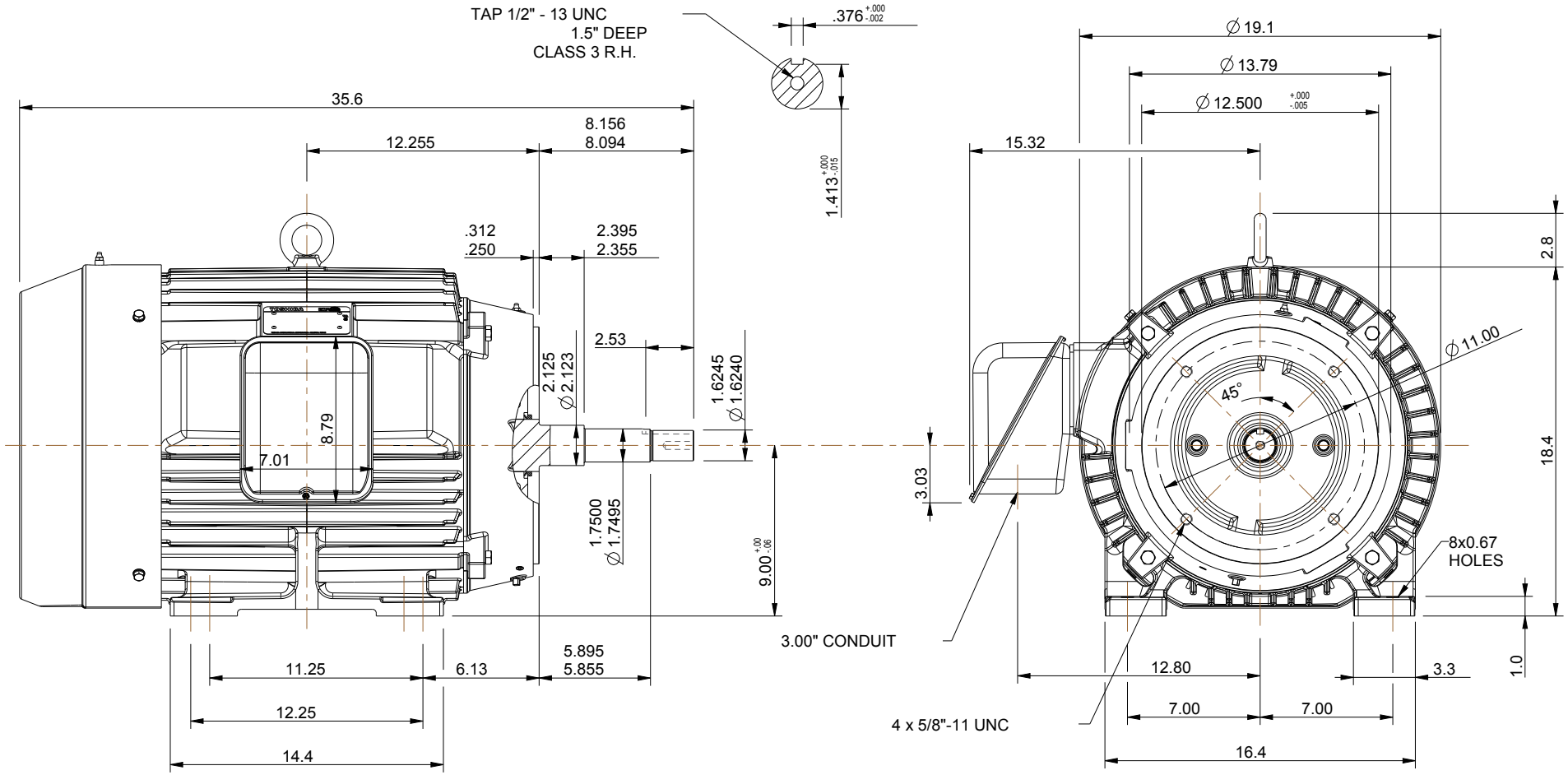

NOTES:
1. MAIN CONDUIT BOX MAY BE ROTATED IN 90° INCREMENTS
2. STANDARD PRODUCT USE BI-DIRECTIONAL FAN. OPPOSITE ROTATION AVAILABLE ONLY BY CONNECTION CHANGE.
3. KEY DIMENSIONS EQUAL 0.375" x 0.375" x 2.53" (MOTOR SUPPLIED WITH KEY)

UNITS: INCHES

TOSHIBA RESERVES THE RIGHT TO MAKE CHANGES OF TECHNICAL IMPROVEMENT WITHOUT NOTICE. DO NOT USE FOR CONSTRUCTION, INSTALLATION, OR APPLICATION PURPOSES UNLESS THE DRAWING IS CERTIFIED.

360JP TEFC FRAME
F1 ASSEMBLY

MDSLV159-07

TOSHIBA
TOSHIBA INTERNATIONAL CORPORATION

TOLERANCES	
.X	.1
.XX	.03
.XXX	.005
.XXXX	.0005

MAXIMUM MOTOR WEIGHT
893 lbs.
405 kgs.

NO	REVISION	DRAWN BY	DATE	CHECK
1	CHANGED 'R' & 'S' DIMENSIONS	MO	04/25/14	JR
0	FIRST ISSUE	M.EASTERBROOK	5/30/13	JR

EQP Global SD
XT SERIES

DRAWN BY: M. EASTERBROOK
CHECK BY: J. RUSSELL
APPROVED BY:

www.toshiba.com/ind