Uncontrolled Copy

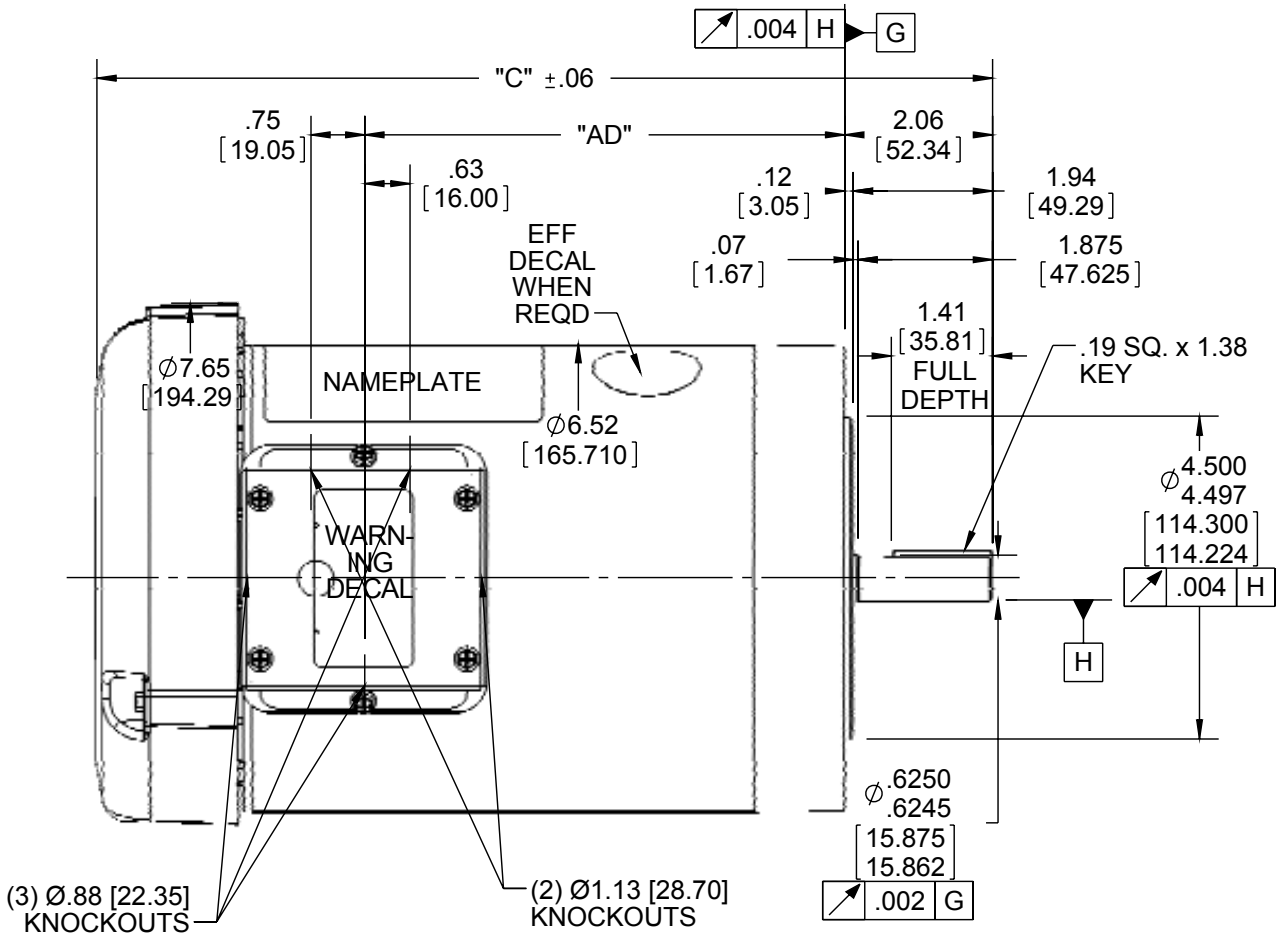

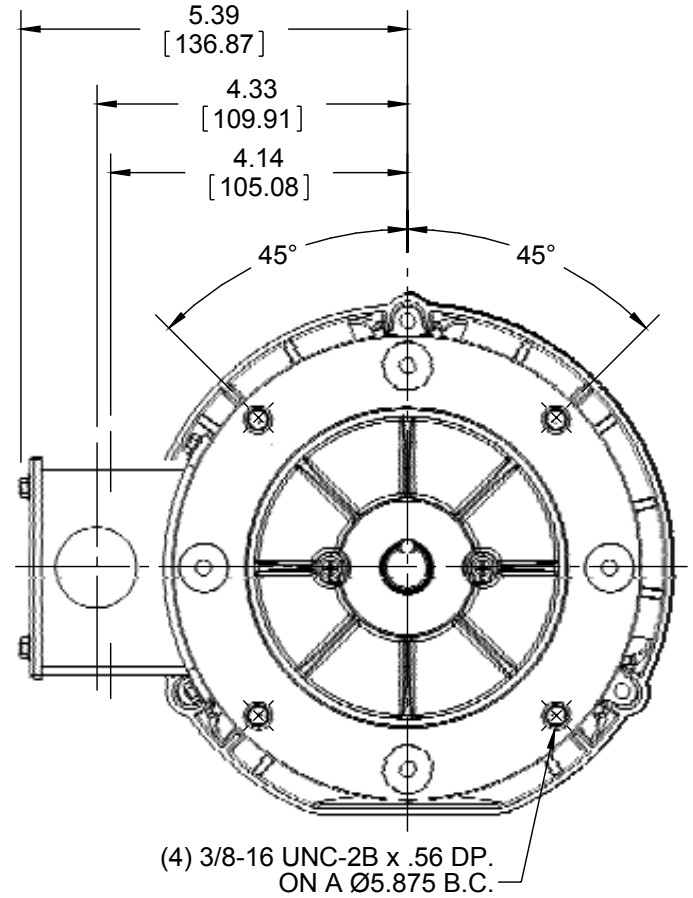

DASH NO.	"C"	"AD"
450	9.98	4.19
500	10.48	4.69
550	10.98	5.19
600	11.48	5.69
625	11.73	5.94

DASH NO.	"C"	"AD"
650	11.98	6.19
675	12.23	6.44
700	12.48	6.69
750	12.98	7.19
800	13.48	7.69

NOTE:
1) GASKETS THROUGHOUT

ORACLE REV
004

DRAWING REVISION	REVISION BY	DATE
E	STEVE WEBER	01/19/16
ECO: ECO-0092098	APPROVED BY	DATE

ECO DESCRIPTION: ADDED #450 (114176)

COPYRIGHT REGAL BELOIT AMERICA, INC. ALL RIGHTS RESERVED.
PROPRIETARY AND CONFIDENTIAL INFORMATION - THIS DOCUMENT IS THE PROPERTY OF REGAL BELOIT AMERICA, INC. ("OWNER") AND CONTAINS OWNER'S PROPRIETARY INFORMATION. ANY PERSON, CORPORATION OR OTHER FIRM RECEIVING IT IS DEEMED, BY RECEIVING IT, TO AGREE THAT IT, AND/OR ANY PART OF IT, SHALL NOT BE DISCLOSED TO ANY PERSON, CORPORATION OR OTHER ENTITY, DUPLICATED, AND/OR USED, EXCEPT AS EXPRESSLY APPROVED IN WRITING IN ADVANCE BY OWNER. THIS DOCUMENT SHALL BE RETURNED TO OWNER UPON REQUEST. IT MAY BE SUBJECT TO CERTAIN RESTRICTIONS UNDER APPLICABLE EXPORT CONTROL LAWS AND REGULATIONS.

TOLERANCES UNLESS OTHERWISE SPECIFIED:

DEC.	INCH	mm	ANGLE
.X	±0.1	[±2.5]	±0.5°
.XX	±0.01	[±0.25]	
.XXX	±0.005	[±0.127]	
.XXXX	±0.0005	[±0.0127]	

REMOVE BURRS & BREAK SHARP EDGES: .003/.015 [.076/.381] X 45°
CORNER FILLETS: R.02 [.51]
MACHINED SURFACES: 125 INCH / 3.2 mm
mm SHOWN IN [BRACKETS]

DRAWN BY	KMM
DATE	08/01/07
APPROVED BY	
DATE	
REFERENCE	
THIRD ANGLE PROJECTION	

Regal Beloit America, Inc.

DESCRIPTION: OUTLINE
56C FRAME TEFC - "C" FACE

MATERIAL:
PROCESS/FINISH: GENERAL PURPOSE

SIZE: A
DRAWING NUMBER: 028776
SHEET: 1 OF 1