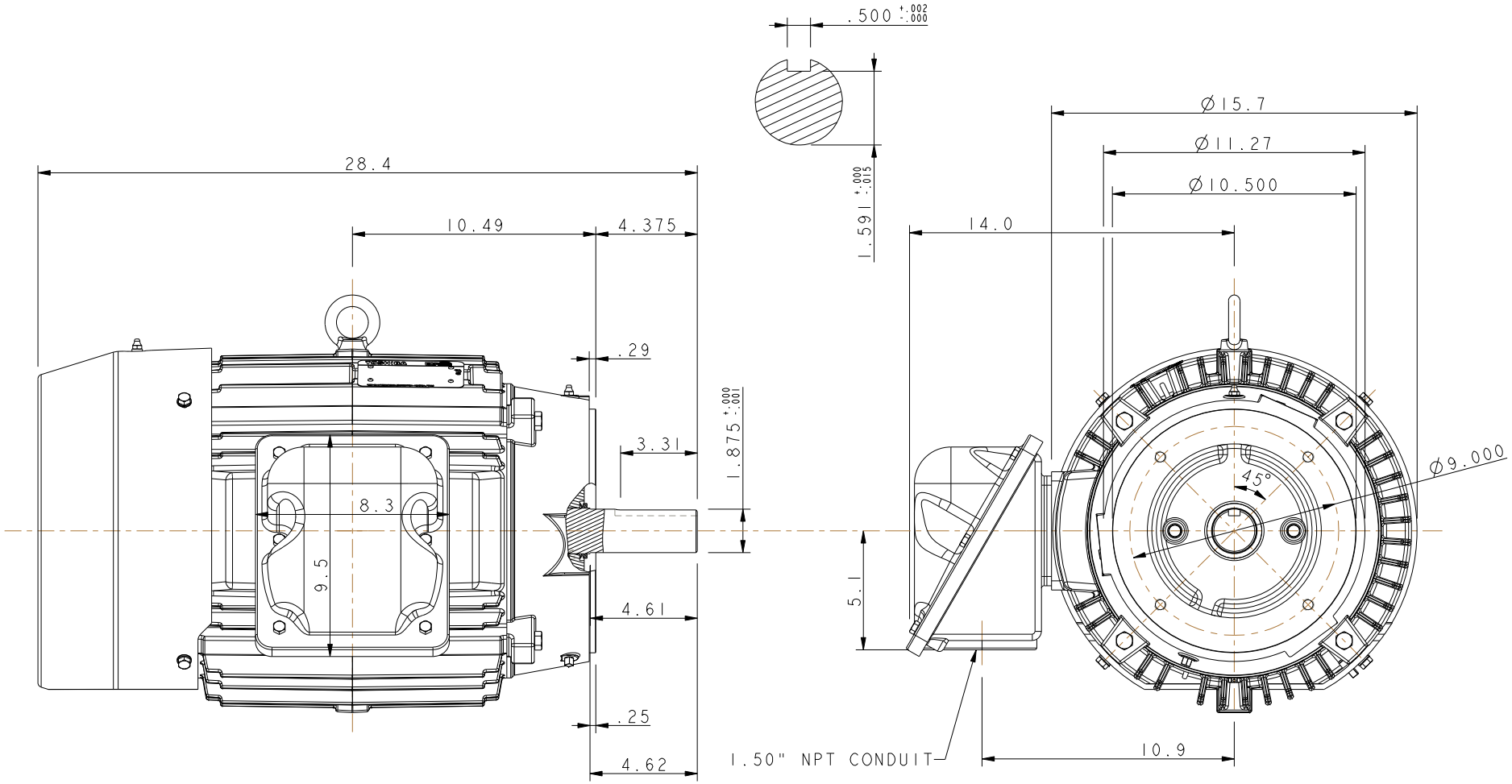

NOTES:
1. MAIN CONDUIT BOX MAY BE ROTATED IN 90° INCREMENTS
2. STANDARD PRODUCT USE BI-DIRECTIONAL FAN. OPPOSITE ROTATION AVAILABLE ONLY BY CONNECTION CHANGE.

UNITS: INCHES

TOSHIBA RESERVES THE RIGHT TO MAKE CHANGES OF TECHNICAL IMPROVEMENT WITHOUT NOTICE. DO NOT USE FOR CONSTRUCTION, INSTALLATION, OR APPLICATION PURPOSES UNLESS THE DRAWING IS CERTIFIED.

280TC TEFC ROUND BODY FRAME F1 ASSEMBLY

MDSLV245-05

TOSHIBA
TOSHIBA INTERNATIONAL CORPORATION

TOLERANCES	
.X	.1
.XX	.03
.XXX	.005
.XXXX	.0005

MAXIMUM MOTOR WEIGHT
448 lbs.
203 kgs.

NO	REVISION	DRAWN BY	DATE	CHECK
0	FIRST ISSUE	N. MOMIN	07/22/11	

EQPGlobal 840
XT SERIES

DRAWN BY: N. MOMIN
CHECK BY:
APPROVED BY:

www.toshiba.com/ind