037641

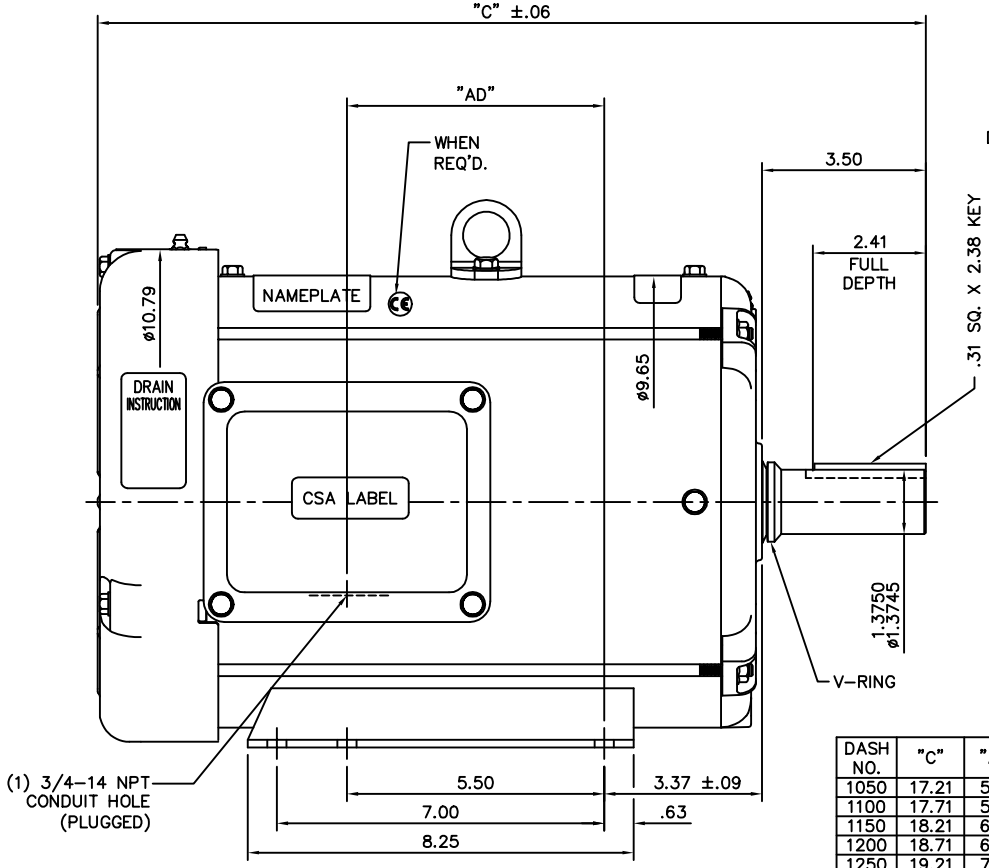

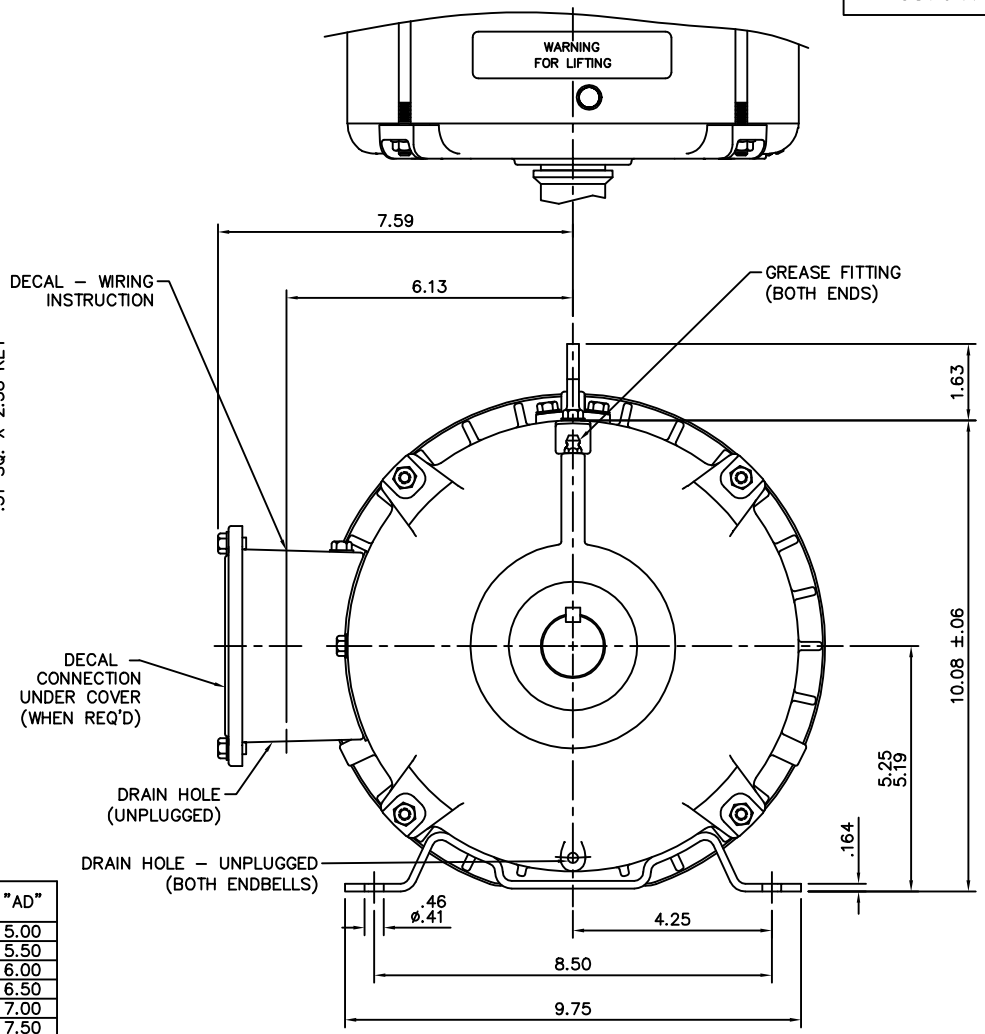

DASH NO.	"C"	"AD"
1050	17.21	5.00
1100	17.71	5.50
1150	18.21	6.00
1200	18.71	6.50
1250	19.21	7.00
1300	19.71	7.50
1350	20.21	8.00
1400	20.71	8.50

WASHGUARD DUTY MOTOR

SPECIAL FEATURES:

1) BUNA-N GASKETS THROUGHOUT
2) SHAFT SEALS - BOTH ENDS OF MOTOR
3) V-RING AT SHAFT END OF MOTOR
4) STAINLESS STEEL SHAFT, NAMEPLATE & HARDWARE
5) FDA APPROVED EPOXY PAINT
6) PLUGGED DRAIN HOLES IN FRAME AT 3:00, 9:00 & 12:00
7) DRAIN HOLES IN CONDUIT BOX, PLUGGED IN TOP HOLE
8) DRAIN HOLES IN BOTH ENDBELLS AT 6:00

NO.	REVISION	BY & DATE

TOLERANCES UNLESS SPECIFIED

DEC.	INCHES
.X	±.1
.XX	±.03
.XXX	±.005
.XXXX	±.0005
CHK ANG	±1/2°

MARATHON ELECTRIC

TITLE: OUTLINE - 210T FRAME TEFC - RIGID

MAT'L.: WASHGUARD

FINISH

CAD FILE: 037641

RFP

DIST

DRAWN LST 8/6/08

CHK

APPD

SCALE 3=8

REF

FMF

PREV

SIZE B

DRAWING NO. 037641

REV.

THIS DRAWING IN DESIGN AND DETAIL IS OUR PROPERTY AND MUST NOT BE USED EXCEPT IN CONNECTION WITH OUR WORK ALL RIGHTS OF DESIGN AND INVENTION ARE RESERVED
THIS IS AN ELECTRONICALLY GENERATED DOCUMENT - DO NOT SCALE THIS PRINT