SS514252

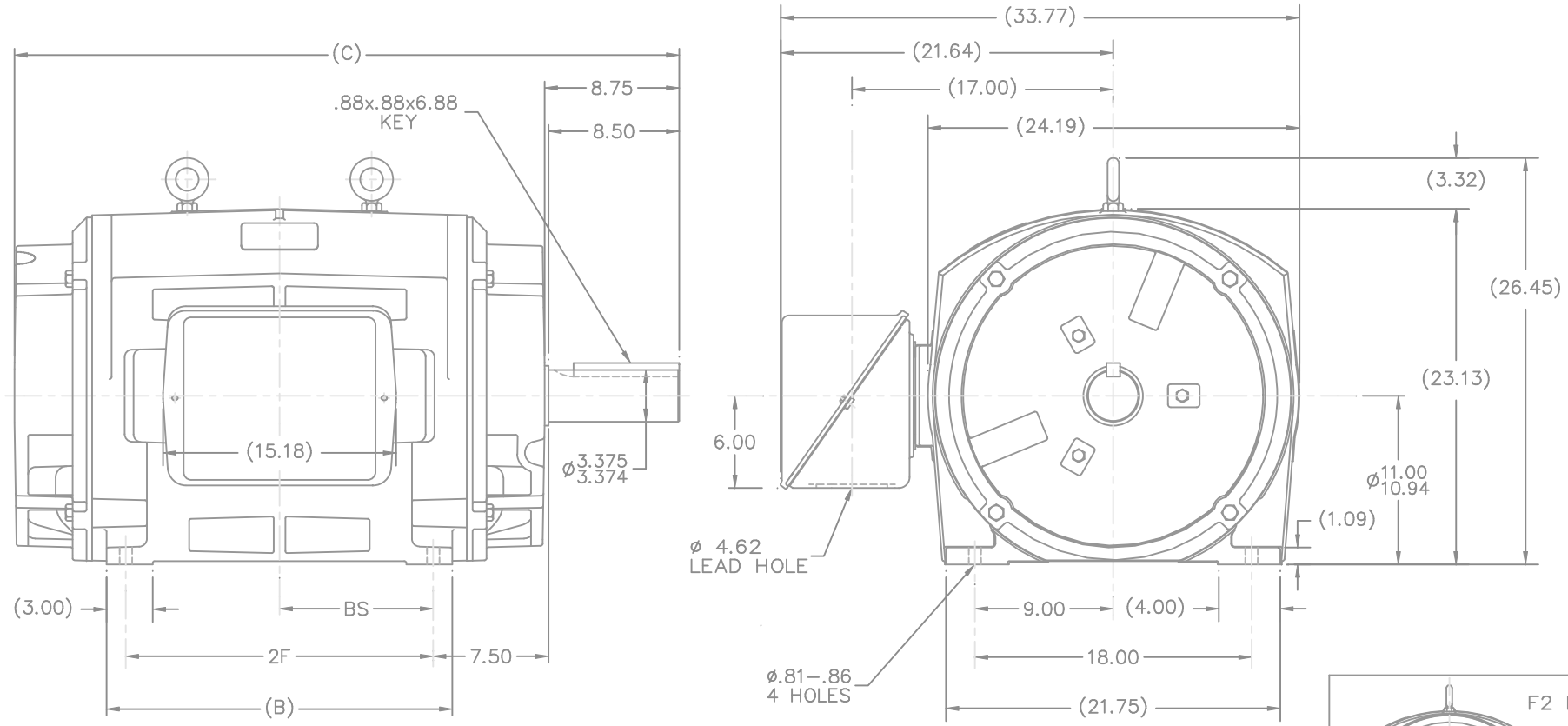

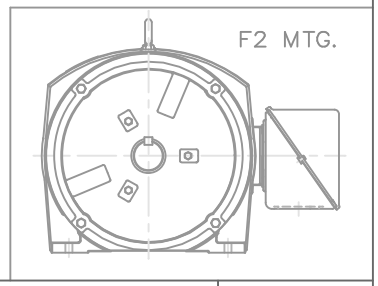

NOTES:

1. C.BOX CAN BE ROTATED IN 90° STEPS.
2. C.BOX CAN BE MOUNTED ON OPPOSITE SIDE BY REMOVING BRACKETS & TURNING FRAME 180°.
3. NAMEPLATES TO BE READ FROM CONDUIT BOX SIDE OF MOTOR.

DASH	FRAME	C	AG	B	2F	2FF	2FFF	BS
2438	447T	43.25	---	22.50	20.00	---	---	10.00
2938	449T	48.25	---	27.50	25.00	---	---	12.50

NO.	REVISION	BY & DATE	CHK
7	UPDATED DE BRACKET GEOMETRY CN 35521	DRS	
6	ADDED F2 MOUNTING VIEW CN 29200–263	DRS 03-24-2000	
5	ADDED OVERALL DIMENSIONS CN 27400–627	BJW 01-17-2000	
4	REVISED TO NEC CONDUIT BOX CN 28405	BJW	
3	REMOVED 700 CU.IN. C'BOX NOTE CN 16342	KL 10-07-1993	
2	'C' DIM. WAS 43.19 & 48.19 CN 15854	JL 06-09-1993	

TOLERANCES UNLESS SPECIFIED

DEC.	INCHES
.X	±.1
.XX	±.03
.XXX	±.005
.XXXX	±.0005
ANG	±7'30"

MARATHON ELECTRIC

TITLE OUTLINE – DR.PR. 447–449T FR.

MAT'L.

FINISH

CAD FILE SS514252

RFP

DIST WA–SB

DRAWN	JL 06–23–1992
CHK	TB 06–23–1992
APPD	JPN 07–10–1992
SCALE	1=7
REF	
FMF	
PREV	

SIZE	DRAWING NO.	PAGE OF	REV.
B	SS514252		7

THIS DRAWING IN DESIGN AND DETAIL IS OUR PROPERTY AND MUST NOT BE USED EXCEPT IN CONNECTION WITH OUR WORK ALL RIGHTS OF DESIGN AND INVENTION ARE RESERVED
THIS IS AN ELECTRONICALLY GENERATED DOCUMENT – DO NOT SCALE THIS PRINT