52A101470

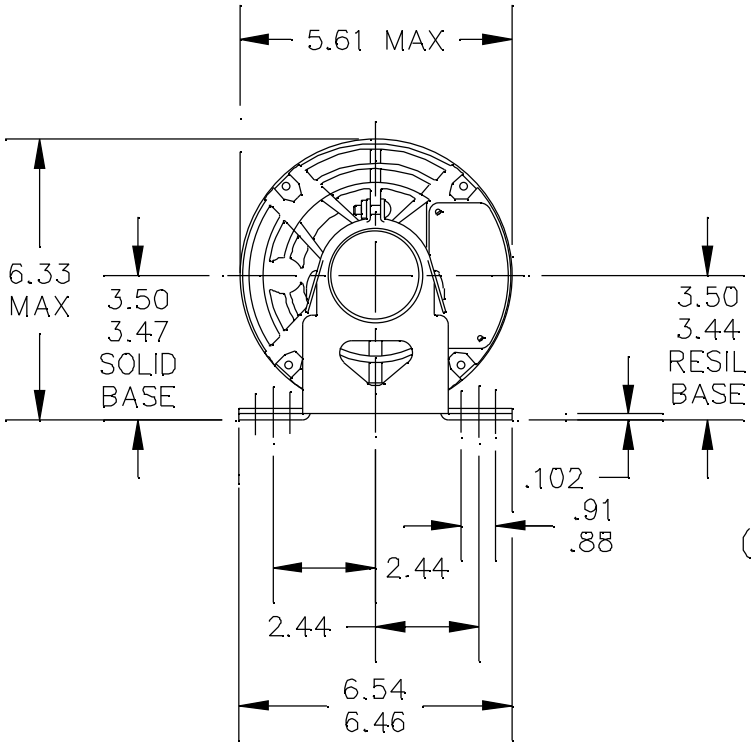

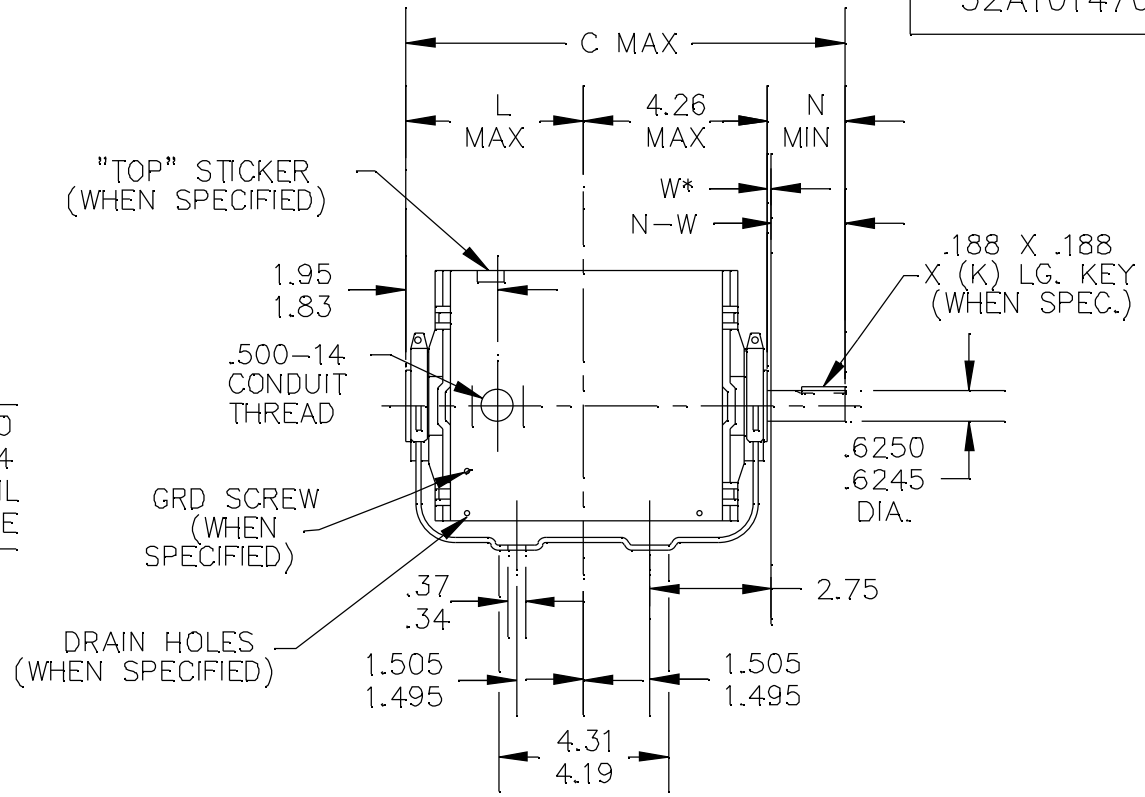

*W IS A CLEARANCE DUE TO VARIATION I N PARTS & ASSEMBLY.

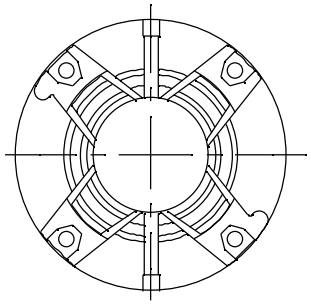

VIEW SHOWING
PE VENTILATION
OPENINGS

PT	TYPE	RBC SIZE	NEMA FR	C	L	N	N–W	K	MIN. SHELL
6	KCP	38	56	9.51	3.42	1.88	2.01/1.79	1.38	
5	K–KH	39	56	11.85	5.76	1.88	2.01/1.79	1.38	7.75
4	K–KH	38	56	11.32	5.23	1.88	2.01/1.79	1.38	
3	K–KH	37	56	10.72	4.63	1.88	2.01/1.79	1.38	
2	K–KH	36	56	10.32	4.28	1.88	2.01/1.79	1.38	
1	K–KH	35	56	9.89	3.80	1.88	2.01/1.79	1.38	

NO.	REVISION	BY & DATE	CHK
13	REDRAWN IN DRAFT SIGHT	UD 10/17/12	PKG
12	CHG TO RBC FORMAT PER IS 05–1777	RK 12/15/05	

TOLERANCES UNLESS SPECIFIED

DEC.	INCHES
.X	±0.1
.XX	±0.02
.XXX	±0.005
.XXXX	±0.0005
ANG	±1.0

REGAL BELOIT — REGAL-BELOIT CORPORATION

TITLE: OUTLINE
DRIP PROOF– SOLID OR RESIL BASE

MAT'L.
FINISH
RFP
DIST
CAD FILE 52A101470

DRAWN GLB 02/05/75
CHK
APPD MDP 07/10/96
SCALE 1=1
REF
FMF
PREV

SIZE A | DRAWING NO. 52A101470 | REV. 13