52A111766

CONTROL SURFACES & DIMENSIONS
(P) PROC.
(E) ENG.
(A) APPL.
(R) REG.

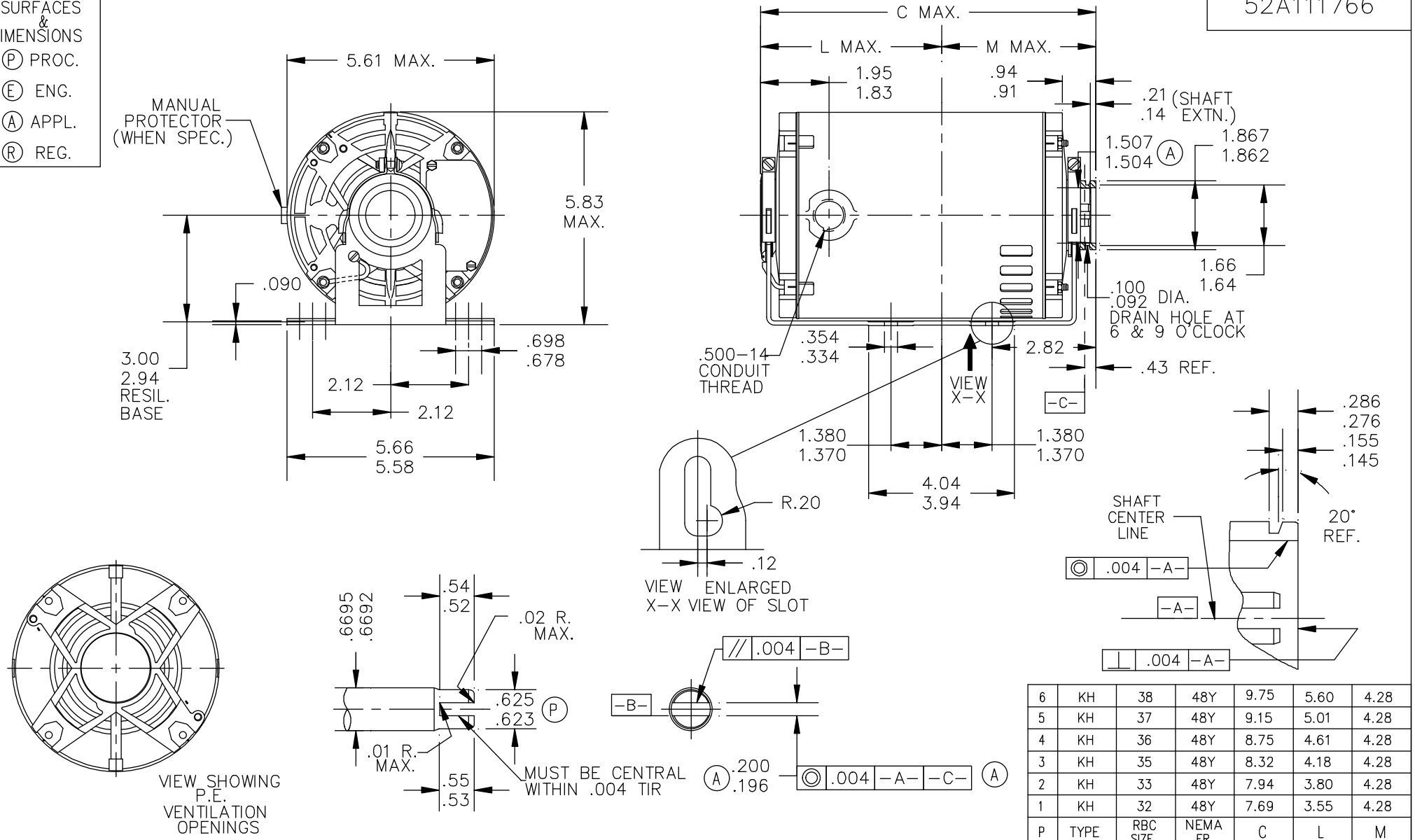

P	TYPE	RBC SIZE	NEMA FR	C	L	M
6	KH	38	48Y	9.75	5.60	4.28
5	KH	37	48Y	9.15	5.01	4.28
4	KH	36	48Y	8.75	4.61	4.28
3	KH	35	48Y	8.32	4.18	4.28
2	KH	33	48Y	7.94	3.80	4.28
1	KH	32	48Y	7.69	3.55	4.28

NO.	REVISION	BY & DATE	CHK
4	ADDED MANUAL PROT. NOTE PER SAMPLE DS13–2736	GRB 05/23/13	GRB
3	CHG GD LD FROM 4:30 TO 7:30 PER IS11–0510 &	UD 9/25/12	PKG
	REDRAWN IN DRAFT SIGHT		
2	UPDATED PER IS07–0144	MDU 02/20/07	

TOLERANCES UNLESS SPECIFIED

	DEC.	INCHES
ANG		±1.0
X		±0.1
XX		±0.02
XXX		±0.005
XXXX		±0.0005

REGAL BELOIT — REGAL-BELOIT CORPORATION

TITLE: OUTLINE
CARBONATOR PUMP–DRIP PROOF –RESIL. BASE

MAT'L.
FINISH
CAD FILE 52A111766
RFP
DIST

DRAWN MDU 02/20/07
CHK
APPD DS 02/20/07
SCALE 1=1
REF
FMF
PREV

SIZE A | DRAWING NO. 52A111766 | REV. 4