SS86642

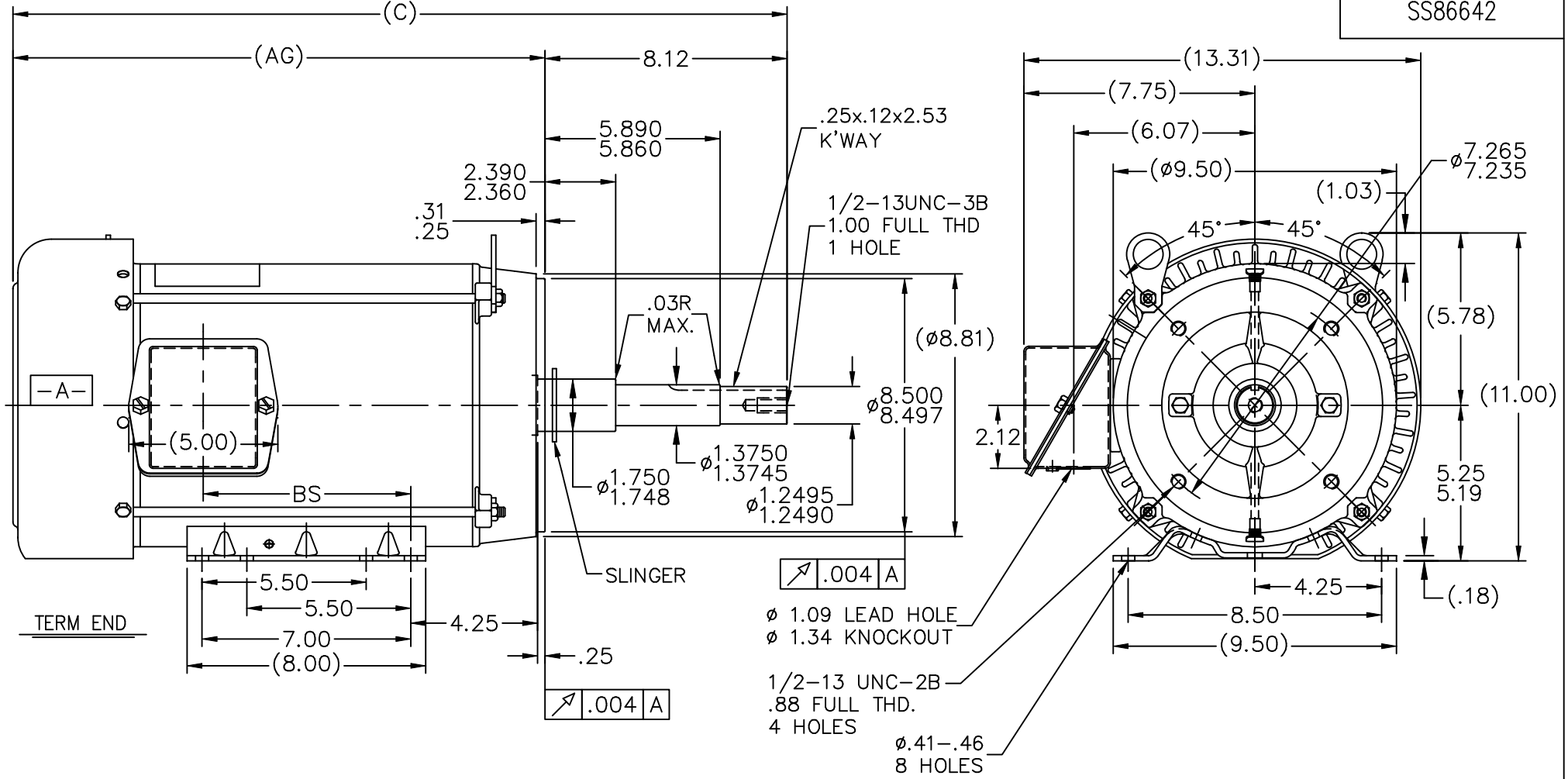

DASH	FR.	C	AG	BS	MOUNTING
965	213JP	24.46	16.34	5.43	
1115	213/15JP	25.96	17.84	6.93	
1240	213/15JP	27.21	19.09	8.18	F1 ONLY

NOTES:
1. NAMEPLATE TO BE READ FROM C'BOX SIDE OF MOTOR.
2. BOX CAN BE MOUNTED IN 90° STEPS.
3. BOX CON BE MOUNTED ON OPPOSITE SIDE BY REMOVING BRACKETS AND TURNING FRAME 180°. (EXCEPT AS NOTED.)

NO.	REVISION	BY & DATE
6	UPDATED DRAWING	TJW 04/30/2007
5	REDRAWN IN AUTOCAD	TAT 07-13-2004
4	UPDATED C' BOX GEOMETRY CN 28425	DRS 01-31-2000
3	REVISED MOUNTING HOLES ON C' FACE WAS .75	MJD 06-18-1998
	FULL THREAD CN 25600-210	
2	REMOVED GRD. SCREW FROM FRAME CN 24453	MJD 10-01-1997

TOLERANCES UNLESS SPECIFIED		
CHK	DEC.	INCHES
ML	.X	±.1
	.XX	±.03
	.XXX	±.005
	.XXXX	±.0005
	ANG	±7'30"

MARATHON ELECTRIC

TITLE OUTLINE
210JP FR.-BB-TS-TEFC-R/S-C' FACE

MAT'L.
FINISH

DRAWN	MH 11-01-1996
CHK	ML 11-05-1996
APPD	DN 11-06-1996
SCALE	1=5
REF	
FMF	
PREV	

THIS DRAWING IN DESIGN AND DETAIL IS OUR PROPERTY AND MUST NOT BE USED EXCEPT IN CONNECTION WITH OUR WORK ALL RIGHTS OF DESIGN AND INVENTION ARE RESERVED
THIS IS AN ELECTRONICALLY GENERATED DOCUMENT - DO NOT SCALE THIS PRINT

RFP
DIST LB
CAD FILE ss86642
SIZE A
DRAWING NO. SS86642
PAGE OF
REV. 6

7/26/2007 3:03:01 PM -