TYPE	OUTPUT		POLE	TIME RATING	VOLTAGE V	Hz	SYN.SPEED R.P.M
	HP.	kW.					
AEHH8B	100	74.6	6	CONT.	460	60	1200

TOTALLY ENCLOSED FAN-COOLED TYPE. SQUIRREL-CAGE ROTOR

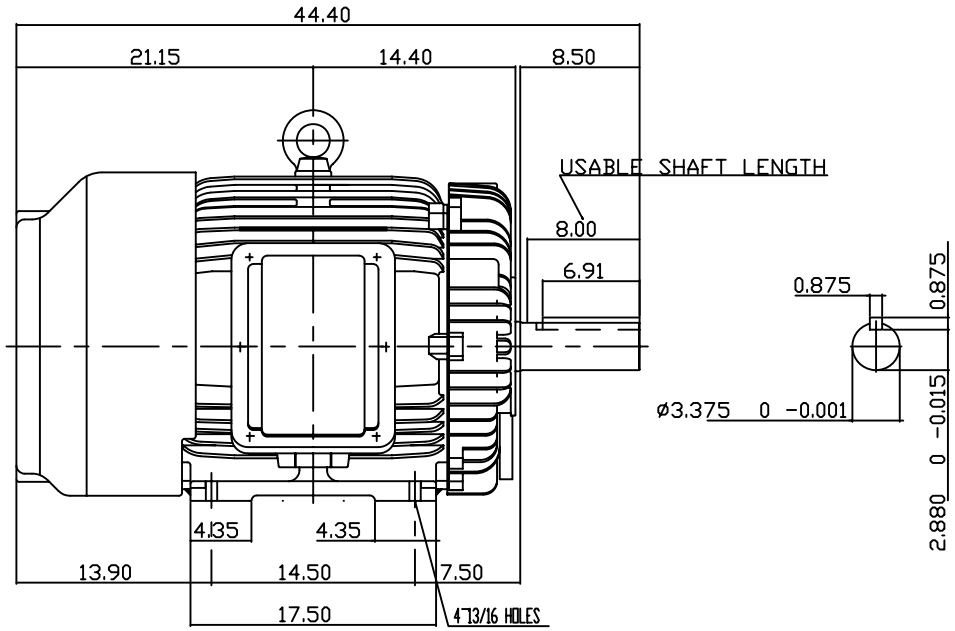

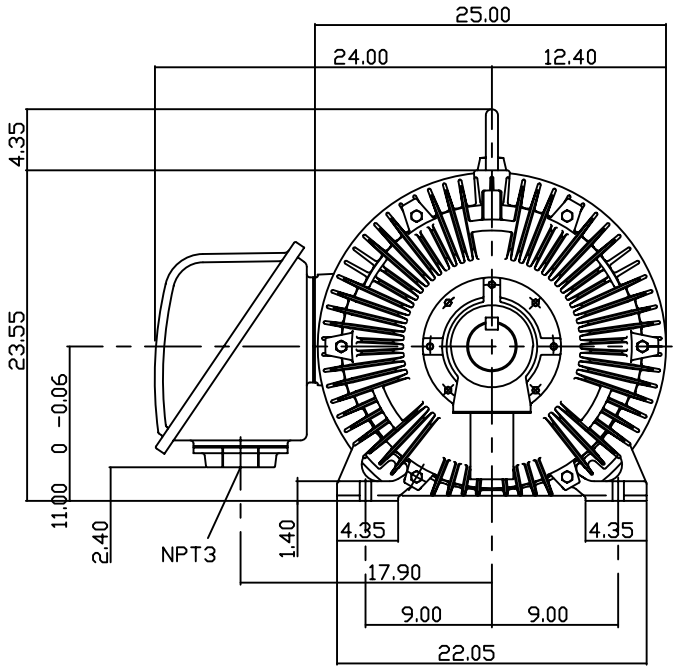

NOTE:

1. DIMENSIONS IN INCH
2. FRAME NO. 444T
3. F CLASS INSULATION, S.F.1.15
4. FOR DIRECT FLEXIBLE COUPLING
5. ENCLOSURE: IP55
6. BEARING SIZE: DRIVE END: 6318C3
   NON-DRIVE END: 6316C3
7. APPROX. WEIGHT: 1650 LBS
8. INPRO SEAL ON BOTH ENDS.
9. NON-SPARKING FAN.
10. NOISE BELOW 83 DBA AT 1 METER AT NO LOAD.
11. VIBRATION VERTICAL/HORIZONTAL BELOW 0.08 IN/SEC
    AXIAL BELOW 0.06 IN/SEC.

DWN.	T.H.Pan	FEB 18 2005
CHKD.	H.HUANG	FEB 18 2005
APPD.	C.WANG	FEB 18 2005

DATE 06-17-05	OUTLINE DIMENSIONS
CATALOG #HB1006	3-PHASE INDUCTION MOTOR
TECO Westinghouse	DWG NO. 3A040Y696 REV: 00

TW-56C