DATE JUNE 27, 2011	OUTLINE DIMENSIONS	MOTOR TYPE: AEHH8P-CF
CAT. #: NP0156C	3-PHASE INDUCTION MOTOR	FRAME NO. 284TC

Pole	HP	kW	Hz	VOLT	Syn.Speed r/min(rpm)
6	15	11.2	60	230/460	1200

Ins	Rating	Dimension in	Approx Weight	Bearings
F	CONT.	inches	428 lbs.	DE: 6311ZZ NDE: 6310ZZ

Totally Enclosed Fan-Cooled Type.Squirrel-Cage Rotor.

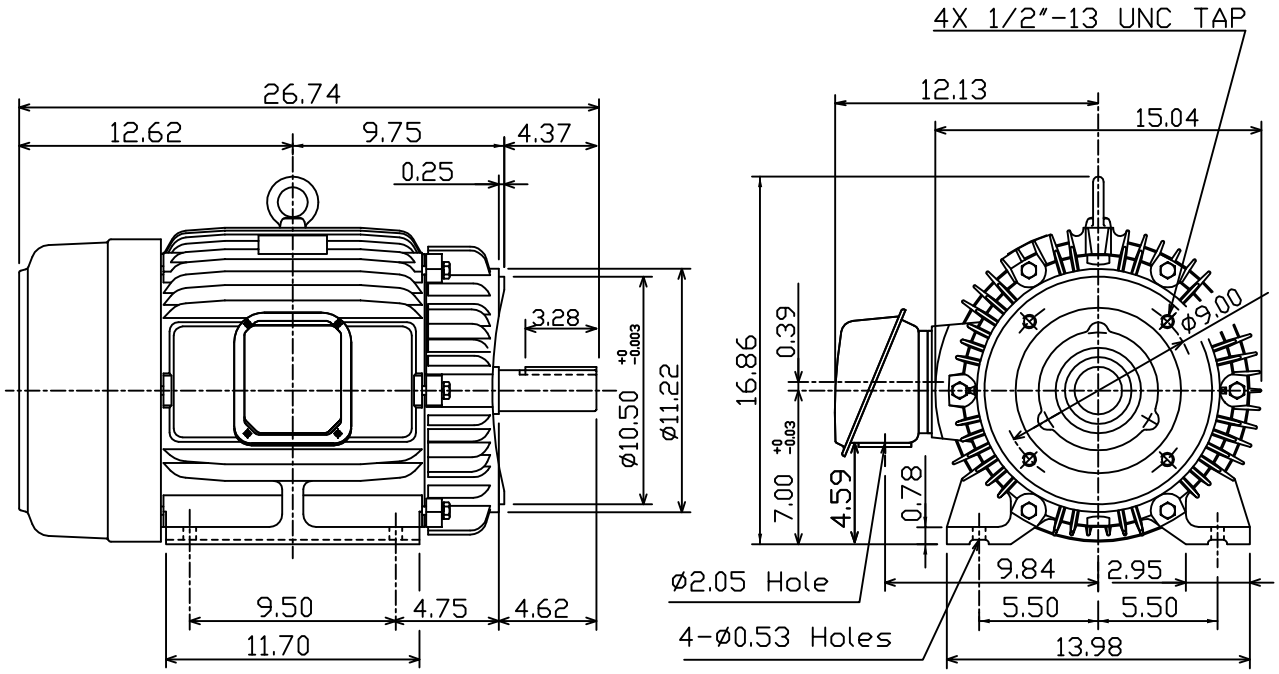

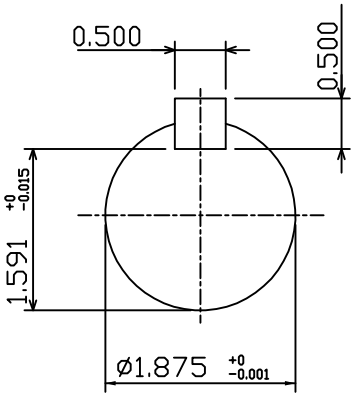

0				

DWN.	K.L.KUO	04 -21 11	TECO Westinghouse	DWG NO.
CHKD.	K.L.KUO	04 -21 11		31049J351140
APPD.	M.C.TSAI	04 -21 11		