DATE Sept. 25, 2006	OUTLINE DIMENSIONS	MOTOR TYPE: AEHH8N-CF
Cat. #: EP1/52C	3-PHASE INDUCTION MOTOR	FRAME NO. 143TC

Pole	HP	kW	Hz	VOLT	Syn. Speed r/min(rpm)
2	1.5	1.12	60	230/460	3600

Ins	Rating	Dimension in	Approx Weight	Bearings
F	CONT.	inches	59 lbs	DE: 6205ZZ NDE: 6205ZZ

Totally Enclosed Fan-Cooled Type. Squirrel-Cage Rotor.

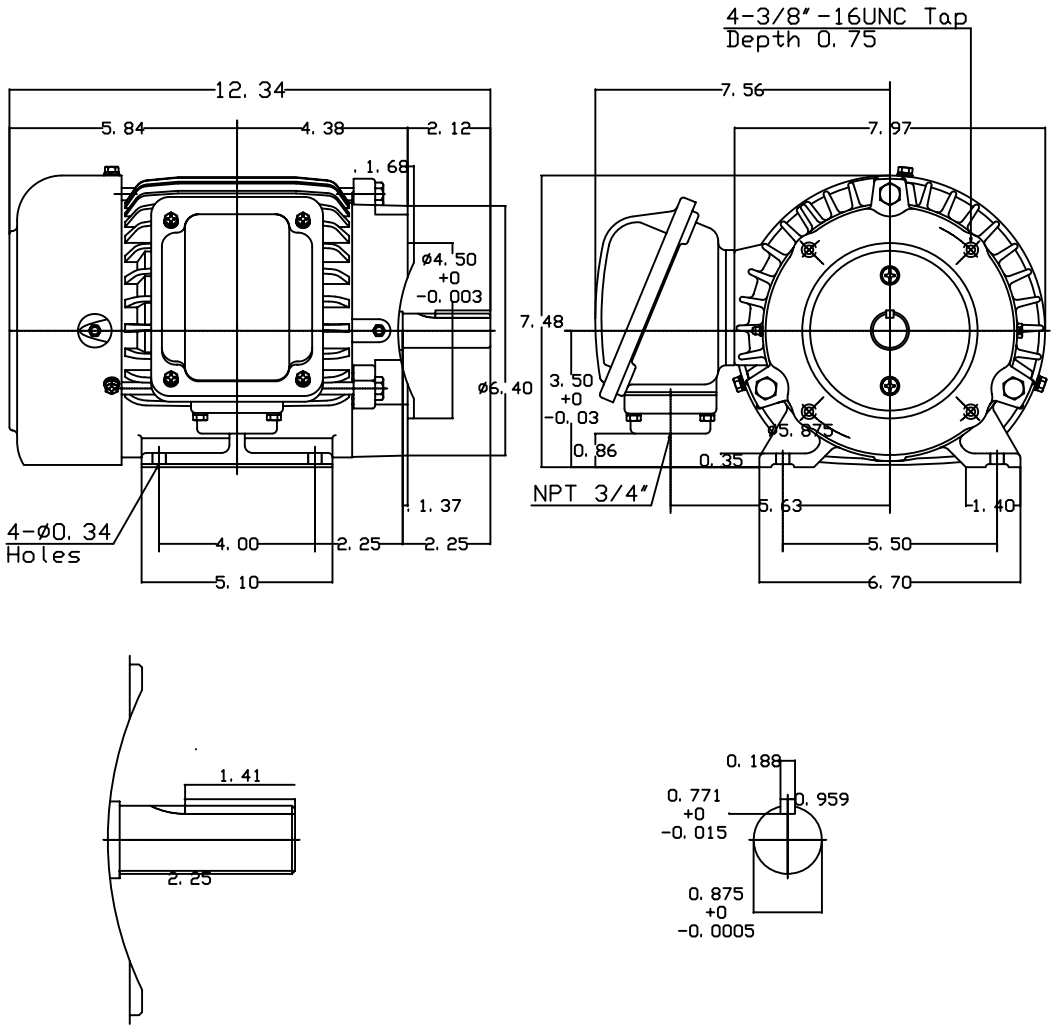

DWN.	F. C. HWU	07·22·97	TECO Westinghouse
CHKD.	C. S. LO	07·23·97	
APPD.	Y. B. HUANG	07·23·97	

DWG NO. 31049J805050