TECO Westinghouse MOTORS (CANADA) INC.	
	Date: January 2, 2017

Dimensional Drawing

Catalogue	Model	HP	Pole	kW	Rating	Voltage	Hz	RPM
SDP12545	ASHH	125	4	93.25	Continuous	575 V	60	1800

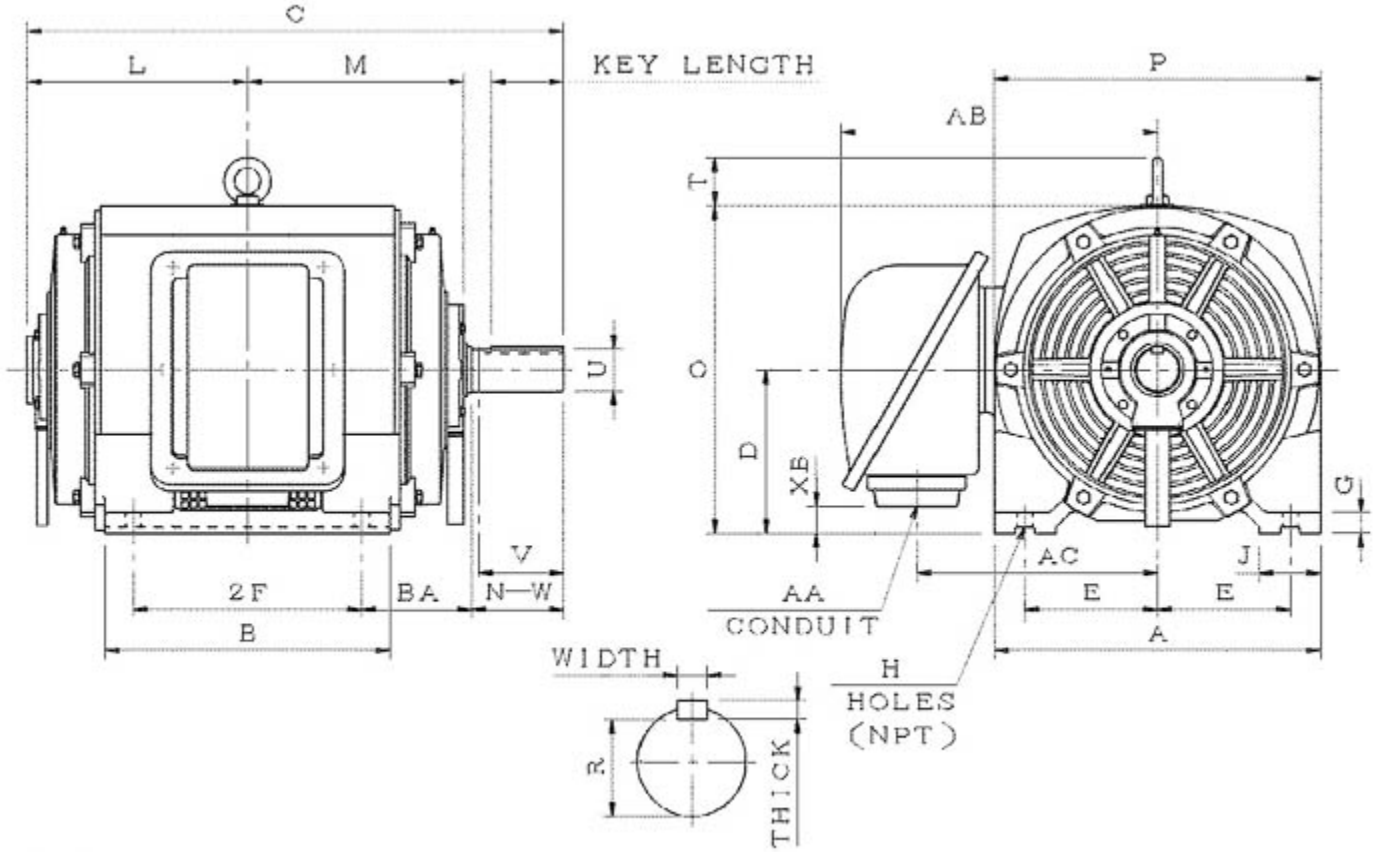

ASHH-SMP-5

Frame Size	Mounting					A	B	C	CD	D
	E	2F	2F2	H	BA					
405T	8	13.75		0.81	6.62	19.68	17.16	34.33		10

G	J	K	L	M	O	P	T	Key			Keyseat
								Width	Thick	Length	R
1.41	3.74		13.58	12.99	19.96	19.68	3.54	0.75	0.75	5.65	2.45

Terminal Housing				Aux Box		C/D Flange					
AA	AB	AC	XB	AE	AX	BB	AH	AK	BD	AJ	BF
3	19.4	14.76	1.81								

Shaft Extension			Bearings		Approx. Weight Lbs	SPL dBA/3ft	Ins. Class	S.F.	Drive Method	Dimensions
N-W	U	V	DE	NDE						
7.25	2.875	7.15	6317	6317	1058	79	F	1.15	Direct Coupling / Belt Drive	Inches

TECO Westinghouse MOTORS (CANADA) INC.	
	Date: January 2, 2017

Technical Data Sheet

Motor Type: ASHH	Catalogue No: SDP12545

Nameplate Information

HP	Pole	RPM	Frame	Voltage	Hz	Phase
125	4	1780	405T	575	60	3
Enclosure	Ins. Class	Service Factor	Time Rating	NEMA Design	Rated Amb.	Rated Altitude
ODP	F	1.15	Continuous	C	-40 to 40 °C	<3300 ft

Typical Performance

Efficiency (%)				Power Factor (%)		
Full Load		3/4 Load	1/2 Load	Full Load	3/4 Load	1/2 Load
Nom.	Min.					
95.4	94.5	95.8	95.4	84.5	82.0	74.5
Torque				Current (A)		
Full Load (lb-ft)	Locked Rotor (% FLT)	Pull Up (% FLT)	Break Down (% FLT)	No Load	Full Load	Locked Rotor
368.70	225	165	205	32.4	116.2	726
NEMA KVA Code	Inertia (WR^2)			Safe Stall Time (s)		Noise Level Sound Press. dB(A)
	Rotor ($lb\text{-}ft^2$)	NEMA Load ($lb\text{-}ft^2$)	Max. Allowable ($lb\text{-}ft^2$)	Cold	Hot	
G	24.060	542	762	17	12	79

VFD Duty Information

Speed Range			VFD		S.F.
Constant Torque	Variable Torque	Constant Power	Carrier	Type	
6-60Hz	3-60Hz	60-120Hz	≤ 5 kHz	VPWM or CPWM	1.0 Only

Additional Information

Bearings		Approx. Weight
DE	NDE	lbs
6317	6317	1058

Hazardous Locations Information

N/A	
0 0	
Temp Code (Sinewave / VFD)	0 / 0