EIXO/SHAFT	
PADRÃO/STANDARD	X
OPCIONAL/OPTIONAL	
ESPECIAL/SPECIAL	

Dimensões em polegada
Dimensions in inches

THIS IS AN UPDATED REVISION, THE PREVIOUS ONE MUST BE DISREGARDED.

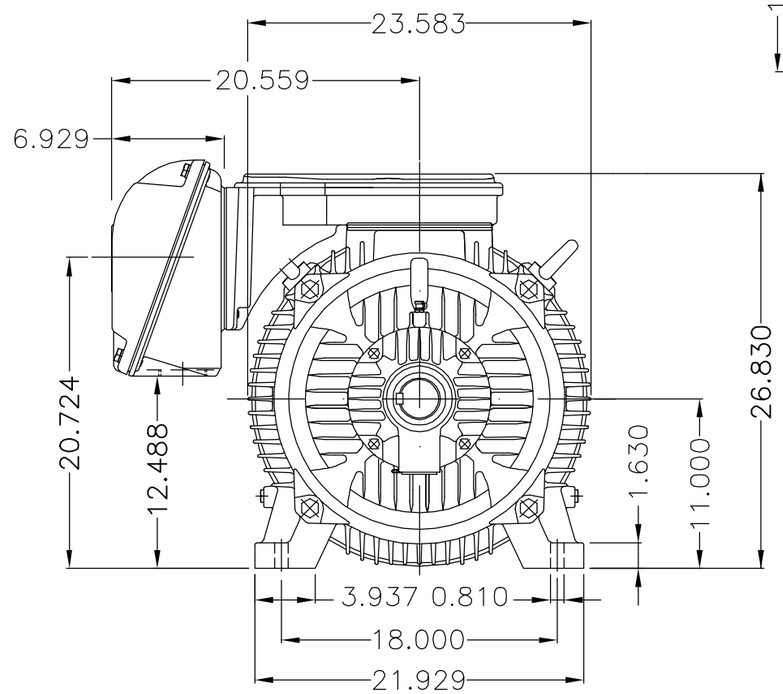

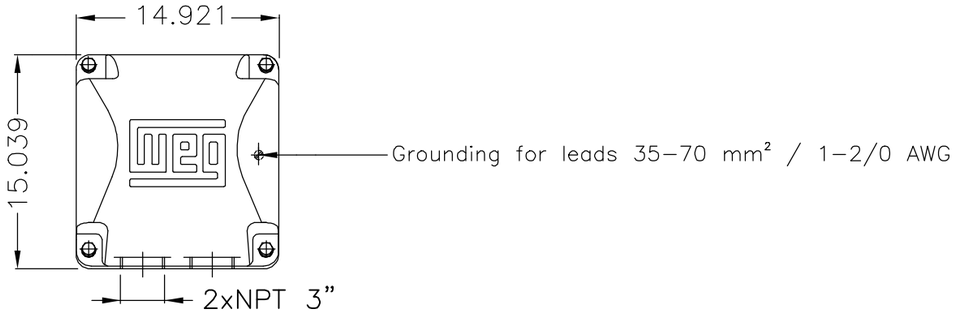

Main terminal box

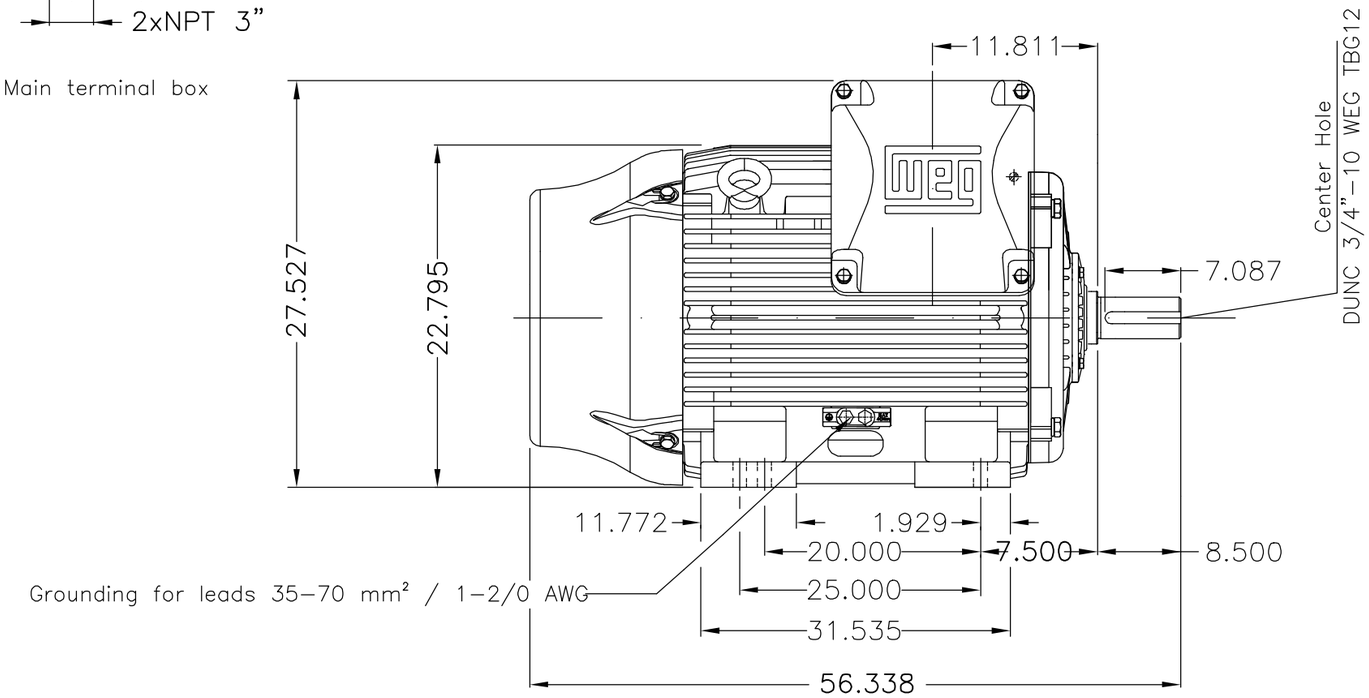

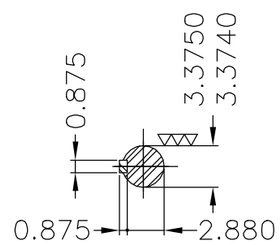

DE Shaft End

Linha do motor: Crusher Duty / Motor purpose: Crusher Duty
Rolamento dianteiro de rolos / DE roller bearing
Dispositivo de travamento de eixo / Shaft locking device
Cor RAL 5009 / Color RAL 5009
Plano de pintura 203A / Painting plan 203A
Forma construtiva B3D / Mounting B3R(D)

WEG EQUIPAMENTOS ELÉTRICOS S/A

200 HP	08 Poles	60Hz	414658029	F
300 HP	06 Poles	60Hz	414658029	E
250 HP	06 Poles	60Hz	414658029	D
350 HP	04 Poles	60Hz	414658029	C
300 HP	04 Poles	60Hz	414658029	B
250 HP	04 Poles	60Hz	414658029	A

ECM	LOC	SUMMARY OF MODIFICATIONS	EXECUTED	CHECKED	RELEASED	DATE	VER
500001307387		DOCUMENTO NOVO	GABRIELID		JMANENTE	09.05.2017	00

EXECUTED	GABRIELID	THREE PHASE W22 MOTOR	10004923929
CHECKED		FRAME 447/9T IP55 TEFC	000 / 00
RELEASED	JMANENTE		
REL DT	09.05.2017	WMO Jaragua do Sul Product Engineering	SHEET 1 / 1

UNCONTROLLED COPY

RELEASED

ZME A3

WEG's property. Forbidden reproduction without previous authorization.