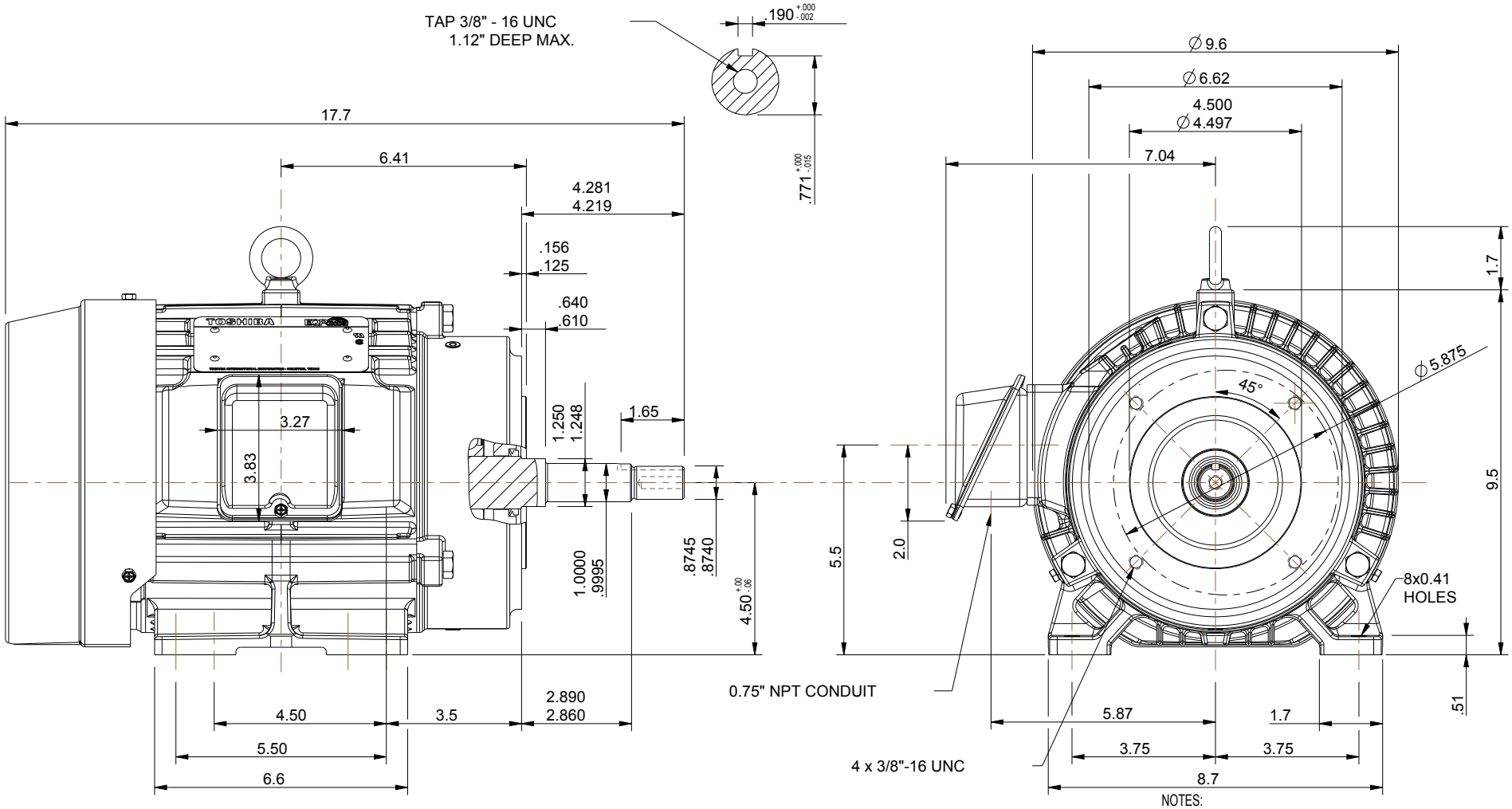


NOTES:
1. MAIN CONDUIT BOX MAY BE ROTATED IN 90° INCREMENTS
2. STANDARD PRODUCT USE BI-DIRECTIONAL FAN. OPPOSITE ROTATION AVAILABLE ONLY BY CONNECTION CHANGE.
3. KEY DIMENSIONS EQUAL 0.188" x 0.188" x 1.65" (MOTOR SUPPLIED WITH KEY)

UNITS: INCHES

TOSHIBA RESERVES THE RIGHT TO MAKE CHANGES OF TECHNICAL IMPROVEMENT WITHOUT NOTICE. DO NOT USE FOR CONSTRUCTION, INSTALLATION, OR APPLICATION PURPOSES UNLESS THE DRAWING IS CERTIFIED.

# 180JM TEFC FRAME F1 ASSEMBLY

MDSLV108-02

**TOSHIBA**
TOSHIBA INTERNATIONAL CORPORATION

| TOLERANCES | |
|---|---|
| .X | .1 |
| .XX | .03 |
| .XXX | .005 |
| .XXXX | .0005 |

MAXIMUM MOTOR WEIGHT
97 lbs.
44 kgs.

| NO | REVISION | DRAWN BY | DATE | CHECK |
|---|---|---|---|---|
| 1 | CHANGE T-BOX ASSEMBLY | M. O'DOWD | 12/18/13 | J. RUSSELL |
| 0 | FIRST ISSUE | M. O'DOWD | 12/6/13 | J. RUSSELL |

EQP Global SD
XT SERIES

DRAWN BY: M. O'DOWD
CHECK BY: J. RUSSELL
APPROVED BY:

www.toshiba.com/ind