DATE May 20, 2011	OUTLINE DIMENSIONS	MOTOR TYPE: AEGHCF
Catalog # GH0022C	3-PHASE INDUCTION MOTOR	FRAME NO. 56C

Pole	HP	kW	Hz	VOLT	r/min
2	2	1.5	60	230/460	3600

Ins	Rating	Dimension in	Approx Weight	Bearings
F	CONT.	inch.	16.36 lbs.	DE: 6205ZZ NDE: 6204ZZ

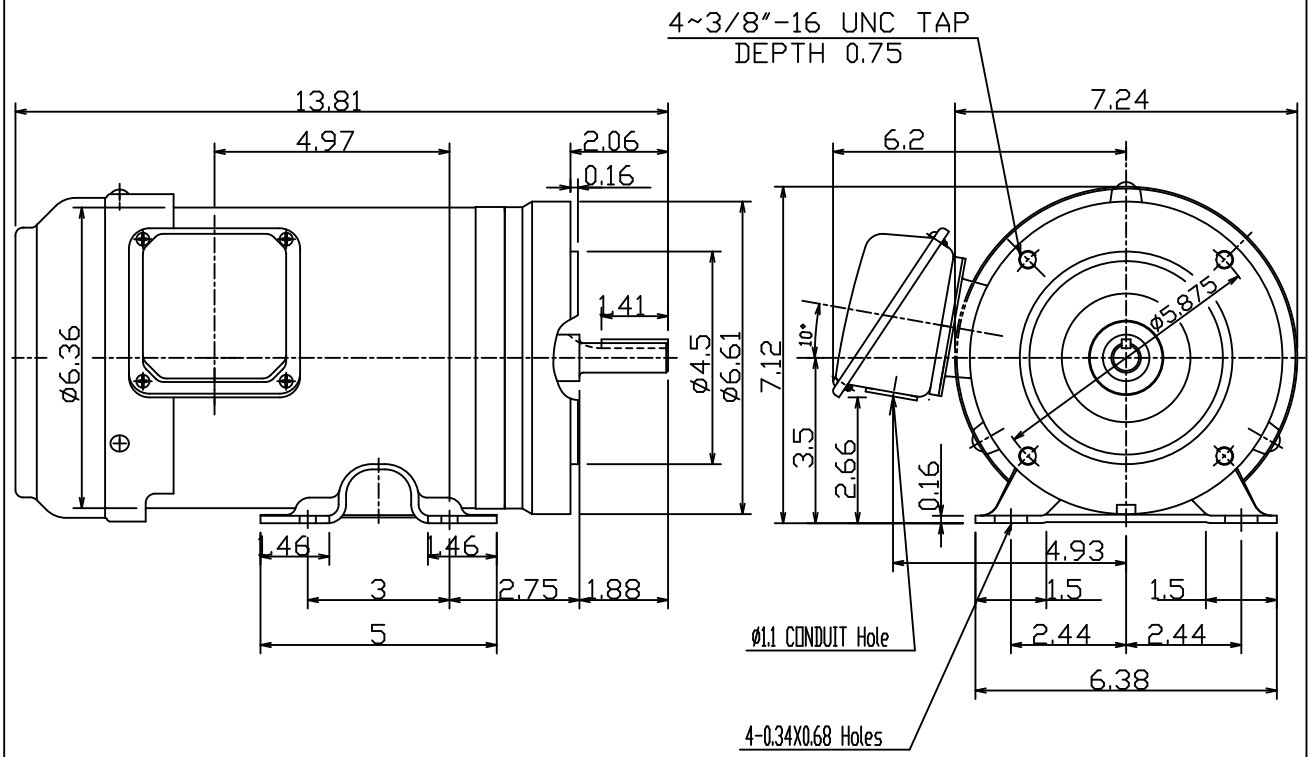

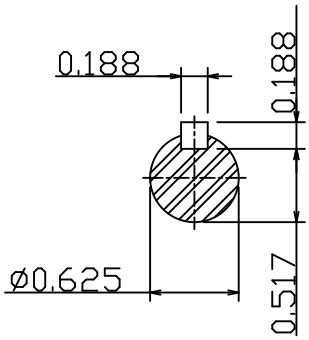

DWN.	陳奕元	03-01-11	TECO Westinghouse	DWG NO.
CHKD.	陳敬元	03-01-11		31049Z107990
APPD.	蔡明◇×	03-01-11		