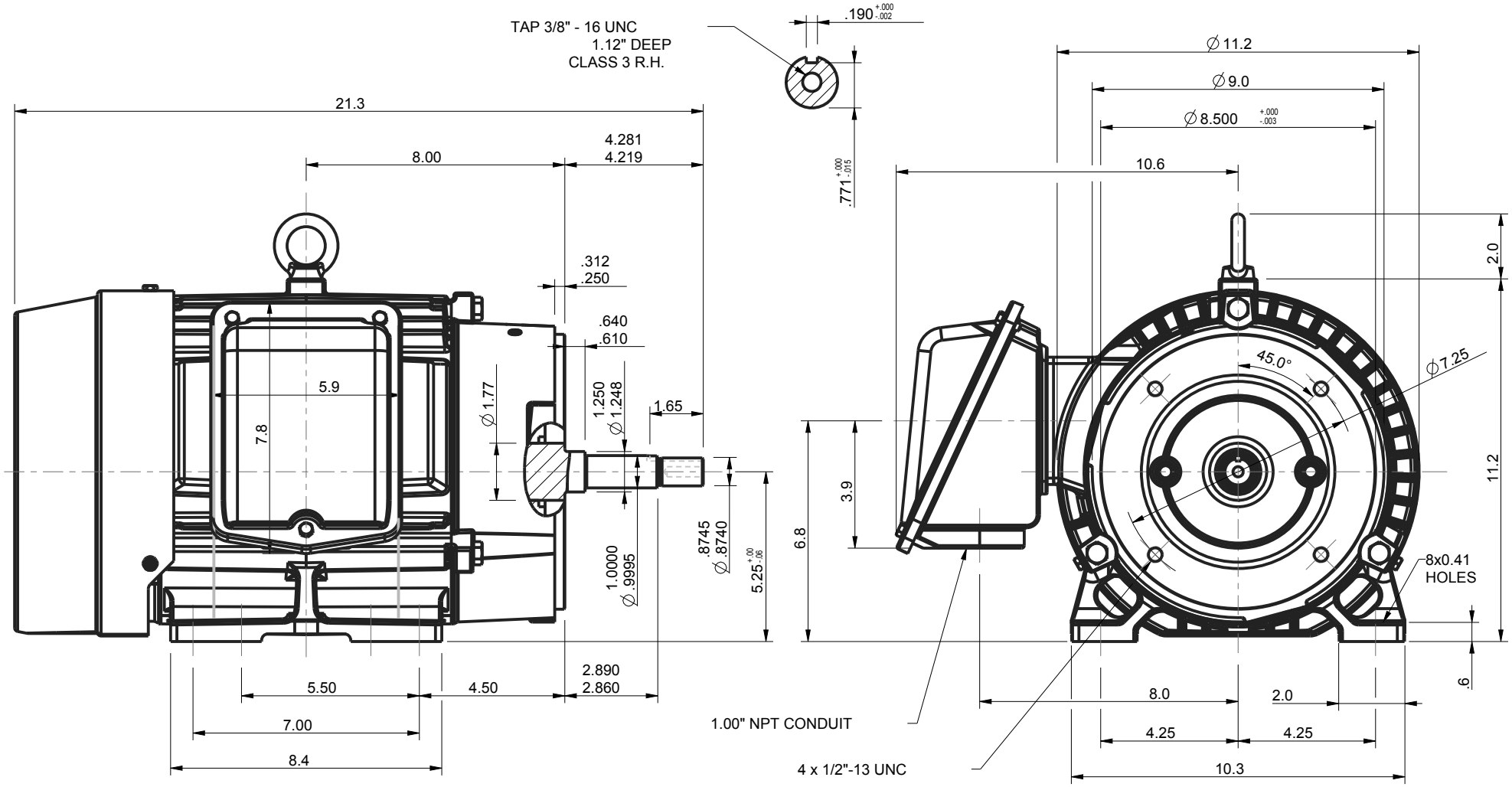

UNITS: INCHES

ROTATION FROM NDE

X CCW ☐ CW

NOTES:

1. MAIN CONDUIT BOX MAY BE ROTATED IN 90° INCREMENTS
2. STANDARD PRODUCT USES BI-DIRECTIONAL FAN. OPPOSITE ROTATION AVAILABLE ONLY BY CONNECTION CHANGE.
3. KEY DIMENSIONS EQUAL 0.188"x 0.188"x 1.65" (MOTOR SUPPLIED WITH KEY)

TOSHIBA RESERVES THE RIGHT TO MAKE CHANGES OF TECHNICAL IMPROVEMENT AND THE DATA MAY CHANGE WITHOUT NOTICE ☐ PRELIMINARY

DO NOT USE FOR CONSTRUCTION, INSTALLATION, OR APPLICATION PURPOSES UNLESS THE DRAWING IS MARKED AS CERTIFIED X CERTIFIED

TOSHIBA

www.toshiba.com/tic

TOSHIBA INTERNATIONAL CORPORATION

SEVERE DUTY EQPlus SD

TOTALLY ENCLOSED FAN COOLED
HORIZONTAL FOOT MOUNTED
3 PHASE INDUCTION MOTOR
213JM/215JM F1 ASSEMBLY

DRAWING #: MDSLV108-03

REV. DATE: 05/15/18 REV. #: 5 PER.: M. O'DOWD

REV. DESCRIP.: UPDATED TITLE BLOCK