DATE Jan. 14, 2009	OUTLINE DIMENSIONS	MOTOR TYPE: AMRCYC
CAT. #: VH1004	3-PHASE INDUCTION MOTOR	FRAME NO. 404TP

Pole	HP	kW	Hz	VOLT	Syn.Speed r/min(rpm)
4	100	75	60	230/460	1800

Ins	Rating	Dimension in	Approx Weight	Bearings
F	CONT.	inch	1276 lbs	DE: 6315C3 NDE: 7322B

NEMA Weather Protected TYPE I (WP I)Squirrel-cage Rotor.

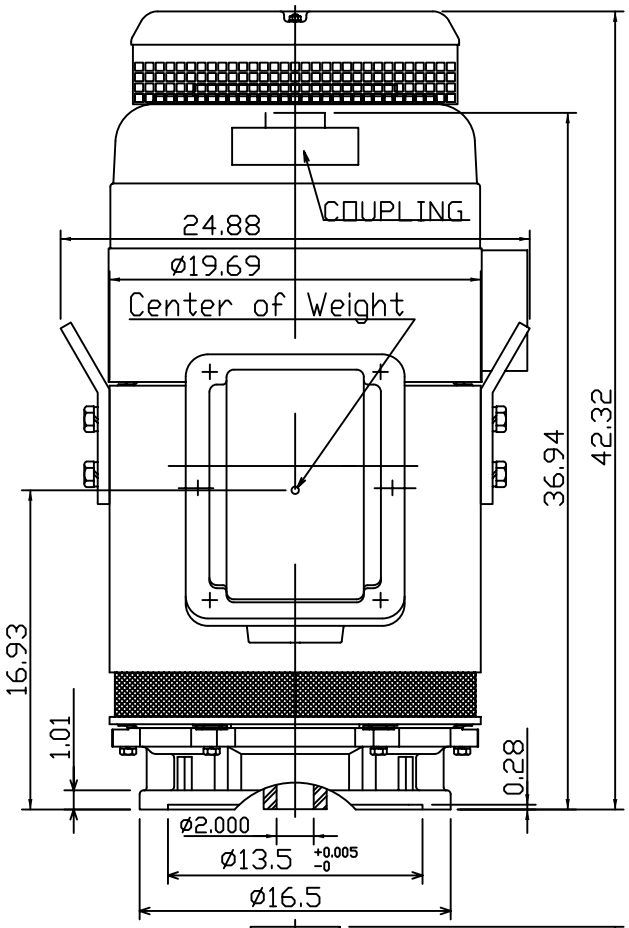

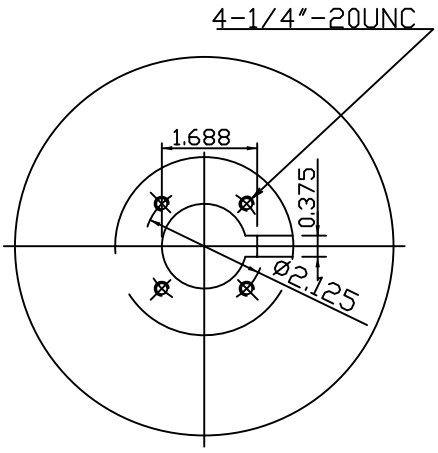

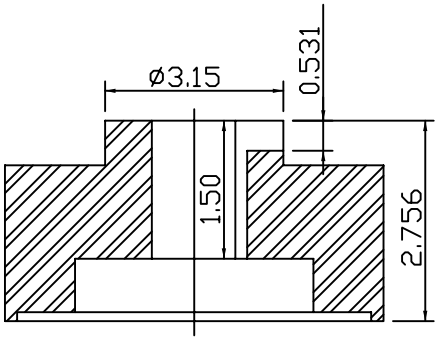

Coupling Dimension

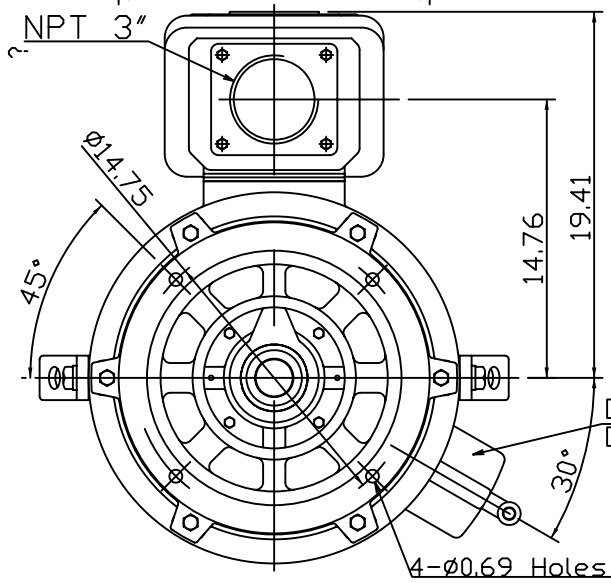

Note:
1. DownthrusT: 7900lbs
   L10 - 8800 hours
2. Rotation: C.C.W
   View from Top
3. With N.R.R.
4. Approx Reed
   Frequencies: 47 Hz
5. Upper Bearing: Oil lube
   Kind of Oil: Turbine Oil
   -300SSU/100°F ISO VG68
   Quantity: 1.06 Gallons

1	12.23.08	

DWN.	???????	12 12 08	TECO Westinghouse	DWG NO.
CHKD.	???????	12 23 08		31057H811151A
APPD.	????????	12 23 08		