TYPE	OUTPUT		POLE	TIME RATING	VOLTAGE V	Hz	SYN.SPEED R.P.M
	HP.	kW.					
AEHGTK	900	671	4	CONT.	2300/4160	60	1800

TOTALLY ENCLOSED FAN-COOLED TYPE, SQUIRREL-CAGE ROTOR

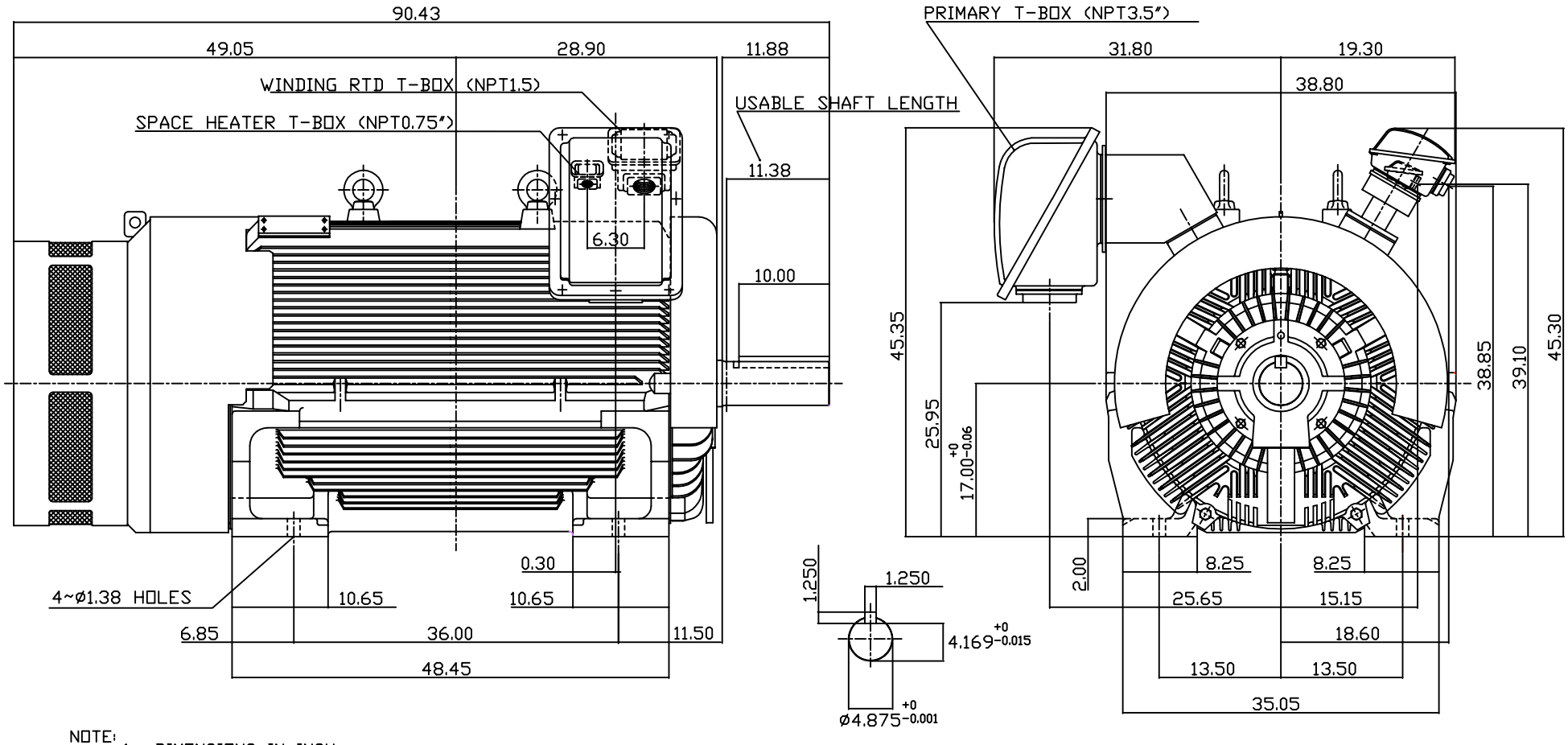

NOTE:
1. DIMENSIONS IN INCH.
2. FRAME NO. 6808B
3. F CLASS INSULATION, S.F.1.15
4. FOR DIRECT FLEXIBLE COUPLING
5. WITH SPACE HEATER 120 VOLT SINGLE PHASE 300 WATTS
6. 100 OHM PLATINUM WINDING RTD'S 2/PHASE
7. BEARING SIZE: DRIVE END: 6326
   NON-DRIVE END: 6322
8. MOTOR APPROX. WEIGHT: 8500 LBS

TW-66C

DWN.	W.L.LIN	APR·17·2003
CHKD.	W.L.LIN	APR·17·2003
APPD.	C.WANG	APR·17·2003

DATE MAY 6, 2004

CATALOG NO. KG9004

TECO Westinghouse

OUTLINE DIMENSIONS

3-PHASE INDUCTION MOTOR

DWG NO. 3A040T4626

REV: 00