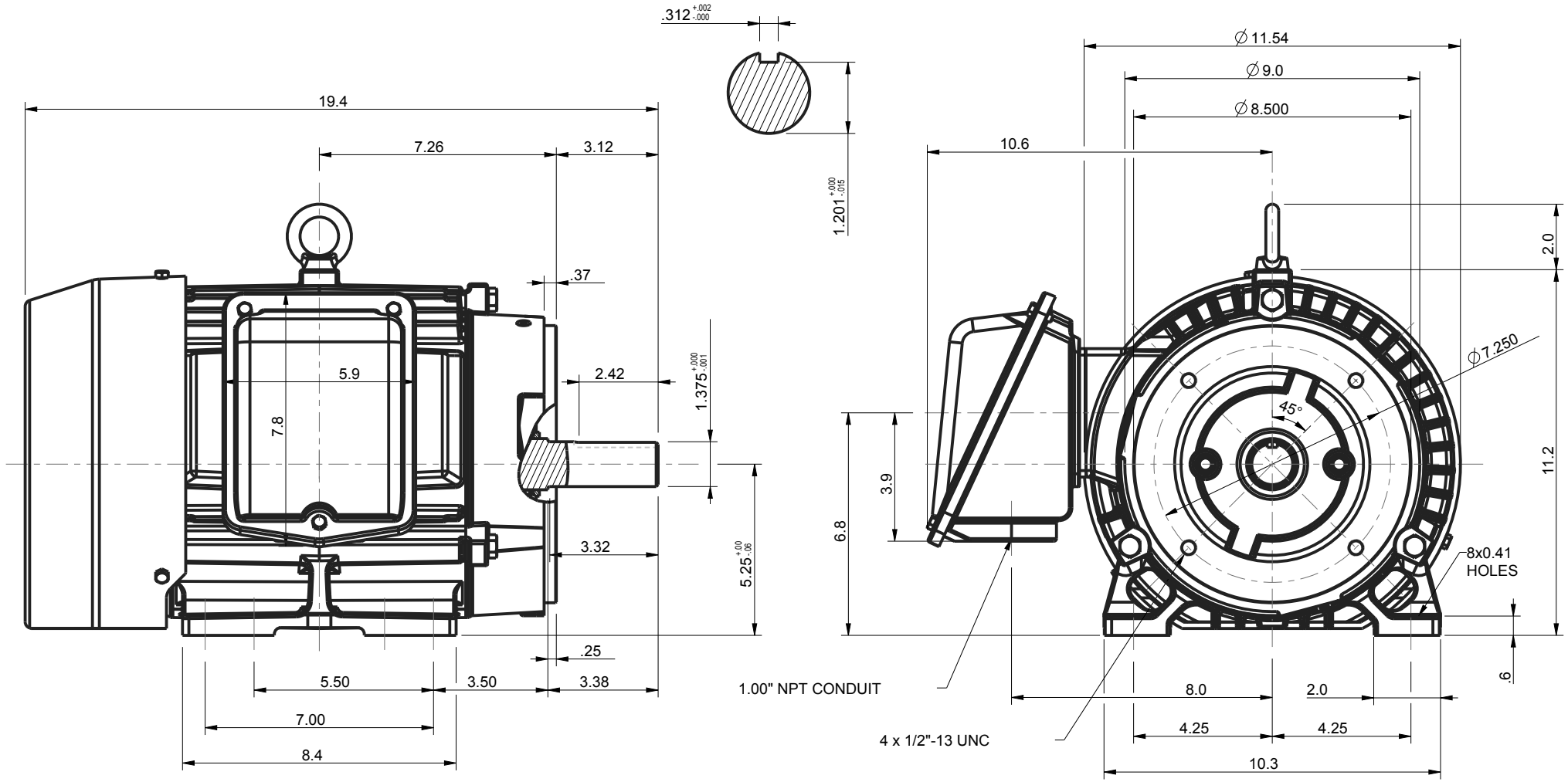

UNITS: INCHES

ROTATION FROM NDE

X CCW CW

NOTES:

1. MAIN CONDUIT BOX MAY BE ROTATED IN 90° INCREMENTS
2. STANDARD PRODUCT USES BI-DIRECTIONAL FAN. OPPOSITE ROTATION AVAILABLE ONLY BY CONNECTION CHANGE.
3. KEY DIMENSIONS EQUAL 0.312"x 0.312"x 2.38" (MOTOR SUPPLIED WITH KEY)

TOSHIBA RESERVES THE RIGHT TO MAKE CHANGES OF TECHNICAL IMPROVEMENT AND THE DATA MAY CHANGE WITHOUT NOTICE

DO NOT USE FOR CONSTRUCTION, INSTALLATION, OR APPLICATION PURPOSES UNLESS THE DRAWING IS MARKED AS CERTIFIED

☐ PRELIMINARY

X CERTIFIED

TOSHIBA

www.toshiba.com/tic

TOSHIBA INTERNATIONAL CORPORATION

MILL & CHEMICAL DUTY EQP Global 840

TOTALLY ENCLOSED FAN COOLED
FOOTED C-FACED
3 PHASE INDUCTION MOTOR
213TC-215TC F1 ASSEMBLY

DRAWING #: MDSLV045-03

REV. DATE: 06/27/18 REV. #: 2 PER.: M. O'DOWD

REV. DESCRIP.: