169995-00

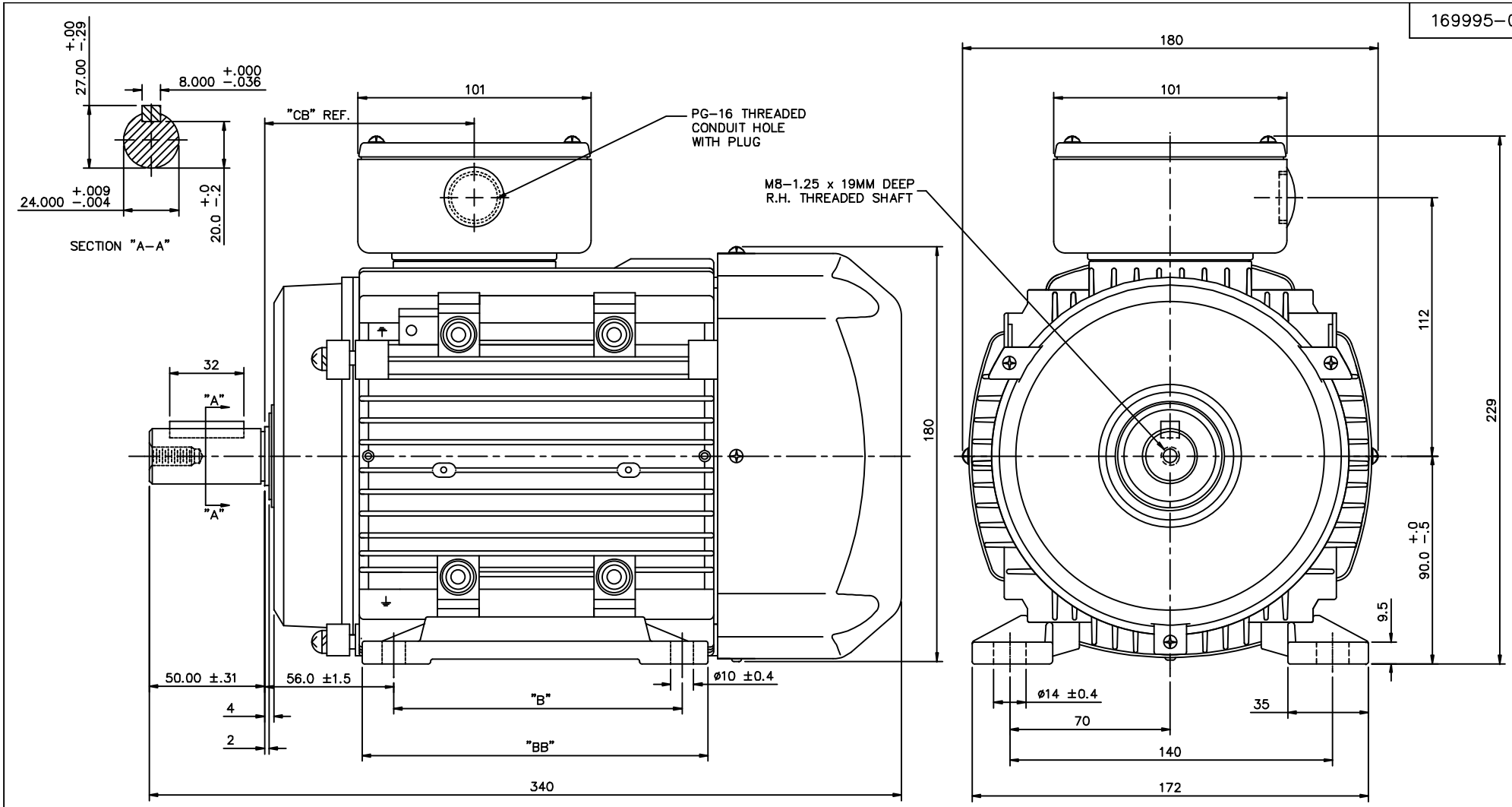

FRAME DESIGN	"B"	"BB"	"CB"
90L	125±0.7	150	91
90S	100±0.7	125	79

NO.	REVISION	BY & DATE	CHK

TOLERANCES UNLESS SPECIFIED

DEC.	METRIC
.X	±2.5
.XX	±.76
.XXX	±.127
.XXXX	±.0127
ANG	±1/2°

REGAL-BELOIT CORPORATION

TITLE: METRIC OUTLINE, IMB3 IEC–90 FRAME

MAT'L.: ALUMINUM

FINISH

CAD FILE: 16999500

RFP

DIST

SIZE: B

DRAWING NO.: 169995–00

REV.

DRAWN: LST 12/28/11

CHK

APPD

SCALE: 1=1.6

REF: 169862–00

FMF: LEESON STOCK

PREV

THIS DRAWING IN DESIGN AND DETAIL IS OUR PROPERTY AND MUST NOT BE USED EXCEPT IN CONNECTION WITH OUR WORK ALL RIGHTS OF DESIGN AND INVENTION ARE RESERVED
THIS IS AN ELECTRONICALLY GENERATED DOCUMENT – DO NOT SCALE THIS PRINT