DATE JUNE 21, 2011	OUTLINE DIMENSIONS	MOTOR TYPE: AEHHXU
CATALOG NO. XP0502	3-PHASE INDUCTION MOTOR	FRAME NO. 326TS

Pole	HP	KW	Hz	VOLT	Syn. Speed RPM
2	50	37.3	60	230/460	3600

Ins	Rating	Dimension in	Approx Weight	Bearings
F	CONT.	inches	766 lbs.	DE: 6312C3 NDE: 6212C3

Totally Enclosed Fan-Cooled Type. Squirrel-Cage Rotor.

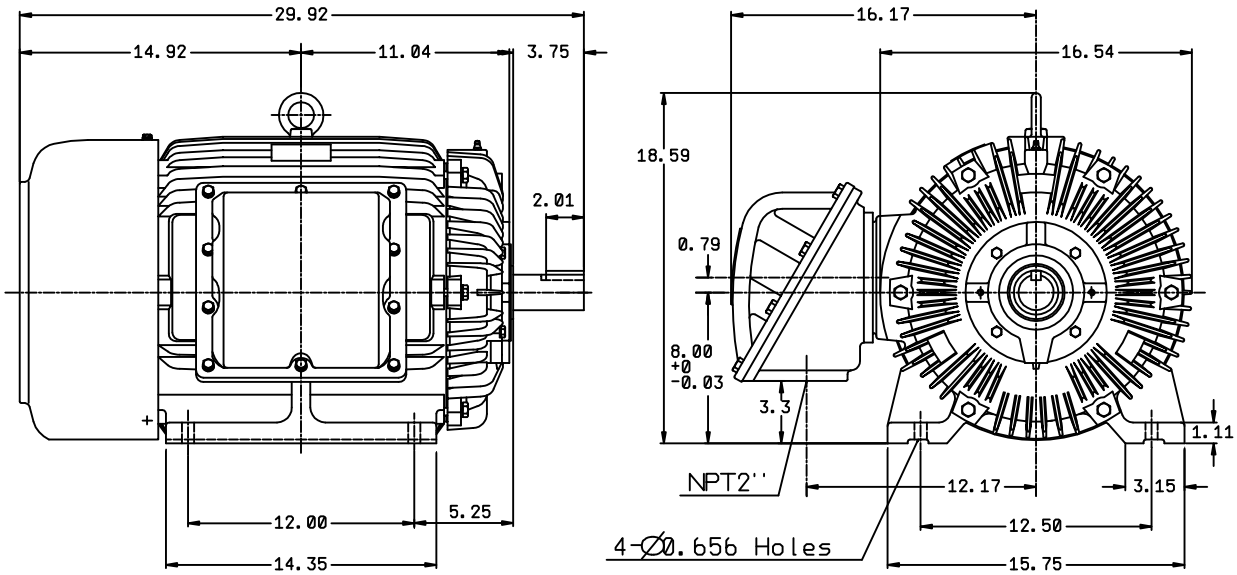

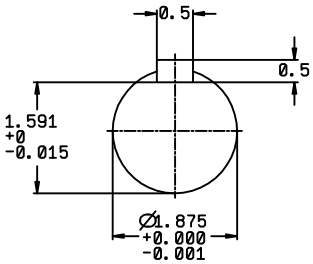

NOTE:
1. **EXPLOSION-PROOF:**
CLASS I GROUP D AND
CLASS II GROUP E,F,G.

1	03.16.00		J.C.LIN

DWN.	J.H.LIANG	11·30·98	TECO Westinghouse	DWG NO.
CHKD.	C.H.KAO	12·26·98		31057H217050
APPD.	Y.B.HUANG	12·26·98		