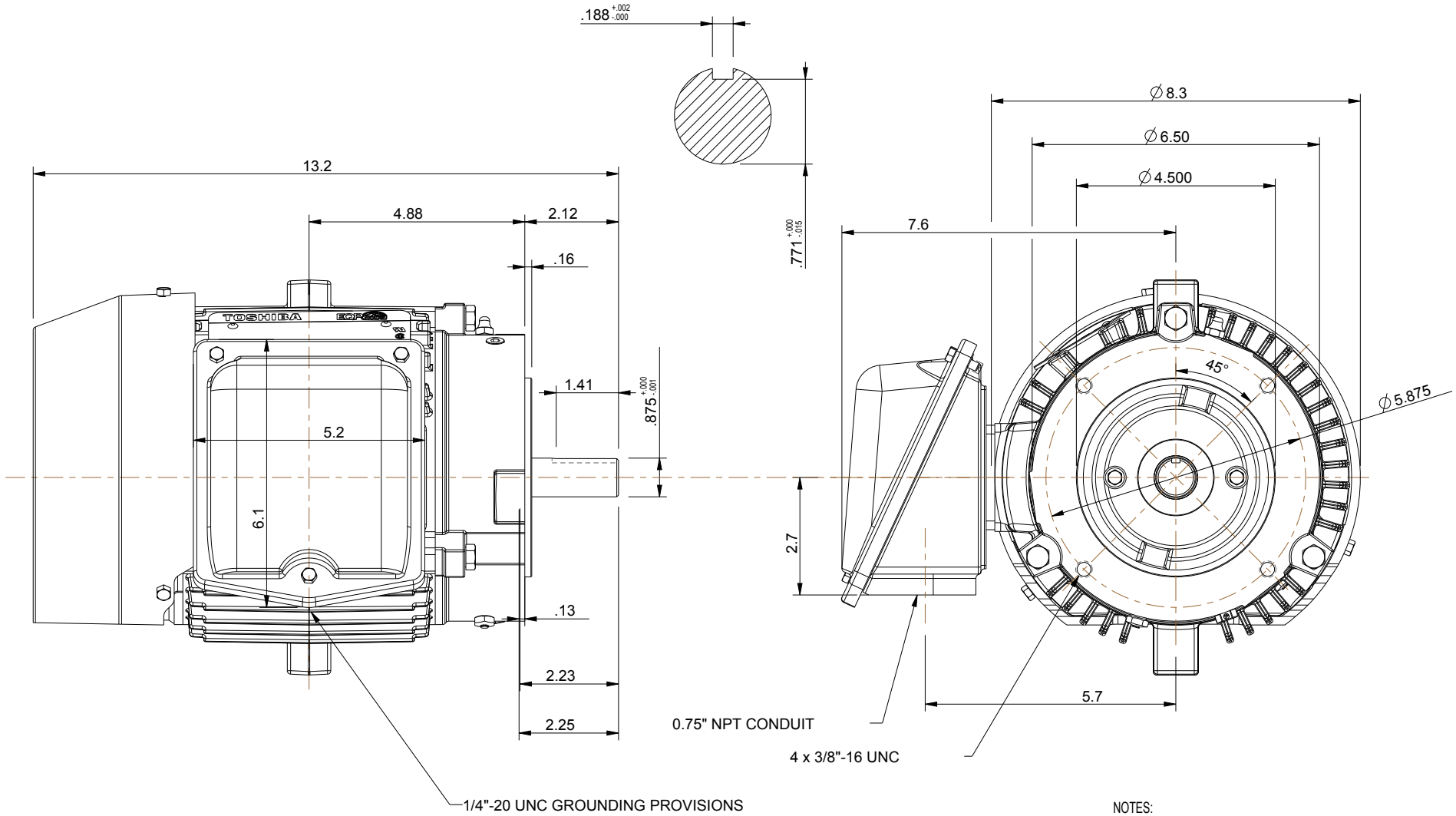

NOTES:
1. MAIN CONDUIT BOX MAY BE ROTATED IN 90° INCREMENTS
2. STANDARD PRODUCT USE BI-DIRECTIONAL FAN. OPPOSITE ROTATION AVAILABLE ONLY BY CONNECTION CHANGE.
3. KEY DIMENSIONS EQUAL 0.188" x 0.188" x 1.38" (MOTOR SUPPLIED WITH KEY)

UNITS: INCHES

TOSHIBA RESERVES THE RIGHT TO MAKE CHANGES OF TECHNICAL IMPROVEMENT WITHOUT NOTICE. DO NOT USE FOR CONSTRUCTION, INSTALLATION, OR APPLICATION PURPOSES UNLESS THE DRAWING IS CERTIFIED.

140TC TEFC ROUND BODY FRAME F1 ASSEMBLY

MDSLV285-01

TOSHIBA
TOSHIBA INTERNATIONAL CORPORATION

TOLERANCES	
.X	.1
.XX	.03
.XXX	.005
.XXXX	.0005

MAXIMUM MOTOR WEIGHT
56 lbs.
25 kgs.

NO	REVISION	DRAWN BY	DATE	CHECK
1	ADDED KEY DIMENSIONS (OVERRIDE 'S' DIM.)	S. CLANCY	08/07/12	JR
0	FIRST ISSUE	N. MOMIN	07/25/11	JR

EQPGlobal 841
XT SERIES

DRAWN BY: N. MOMIN
CHECK BY: J. RUSSELL
APPROVED BY:

www.toshiba.com/ind