THIRD ANGLE PROJECTION

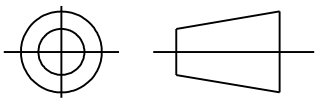

REVISIONS			
REV.	DESCRIPTION	DATE	APPROVED
4	CHG TO RBC FORMAT PER IS05-1777	03/09/06	SUDHA

CONTROL SURFACES & DIMENSIONS
(P) PROC.
(E) ENG.
(A) APPL.
(R) REG.

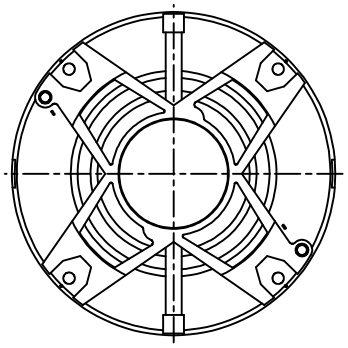

VIEW SHOWING P.E. VENTILATION OPENINGS

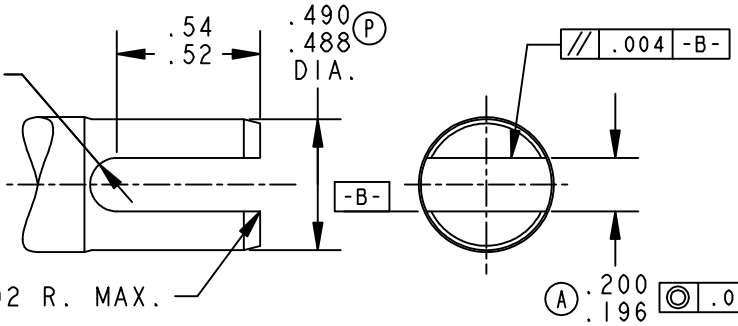

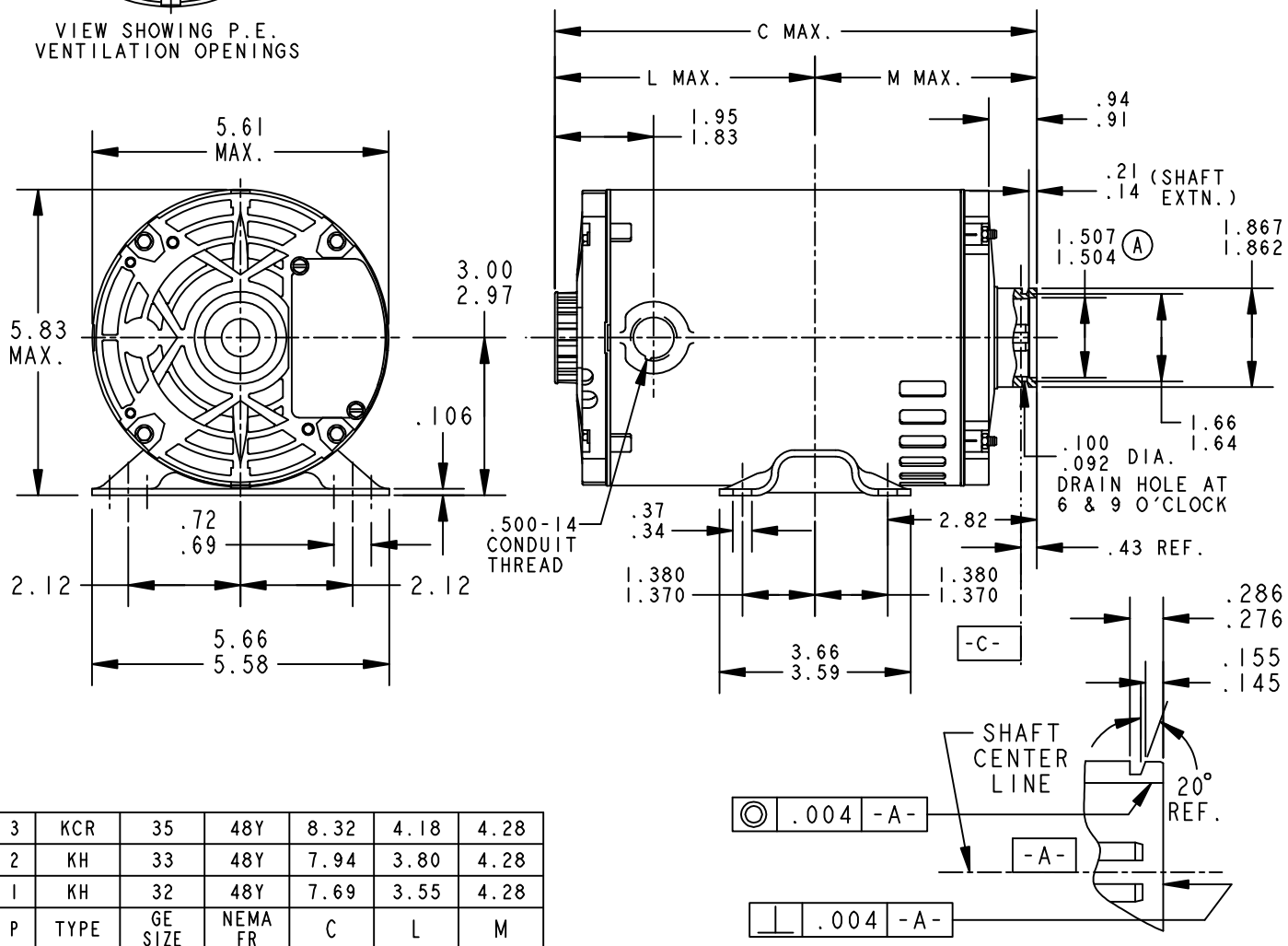

P	TYPE	GE SIZE	NEMA FR	C	L	M
3	KCR	35	48Y	8.32	4.18	4.28
2	KH	33	48Y	7.94	3.80	4.28
1	KH	32	48Y	7.69	3.55	4.28

SIGNATURES		DATE
MODEL	M.D.PAPE	11/12/93
DETAIL	.	.
CHECKED	.	.
ENGRG	.	.
MFG	.	.
QUALITY	.	.
ISSUED	M.D.PAPE	11/12/93

SOLID MODEL: 52A109311

FOR ADDITIONAL INFO REFER TO:
APPLIED PRACTICES .
DIMENSIONS ARE IN INCHES
MATERIAL .

REGAL-BELOIT CORPORATION

TITLE
OUTLINE
CARBONATOR PUMP - OPEN - WELDED BASE - SLV. BRG.

SIZE A | DRAWING 52A109311 | REV 4

SCALE: 0.250 | REF. No: . | SHEET 1 OF 1

SHEET 1 | REV 4 | 52A109311 | DRAWING NO. | SIZE A

7/26/2011 7:32:03 AM