DATE APRIL 30, 2004	OUTLINE DIMENSIONS	MOTOR TYPE: AEUHXF
CATALOG NO. XV1/56C	3-PHASE INDUCTION MOTOR	FRAME NO. 182TC

Pole	HP	KW	Hz	VOLT	Syn. Speed RPM
6	1.5	1	60	230/460	1200

Ins	Rating	Dimension in	Approx Weight	Bearings	
F	CONT.	inches	138 lbs.	DE: 6306ZZ	NDE: 6306ZZ

Totally Enclosed Fan-Cooled Type, Squirrel-Cage Rotor.

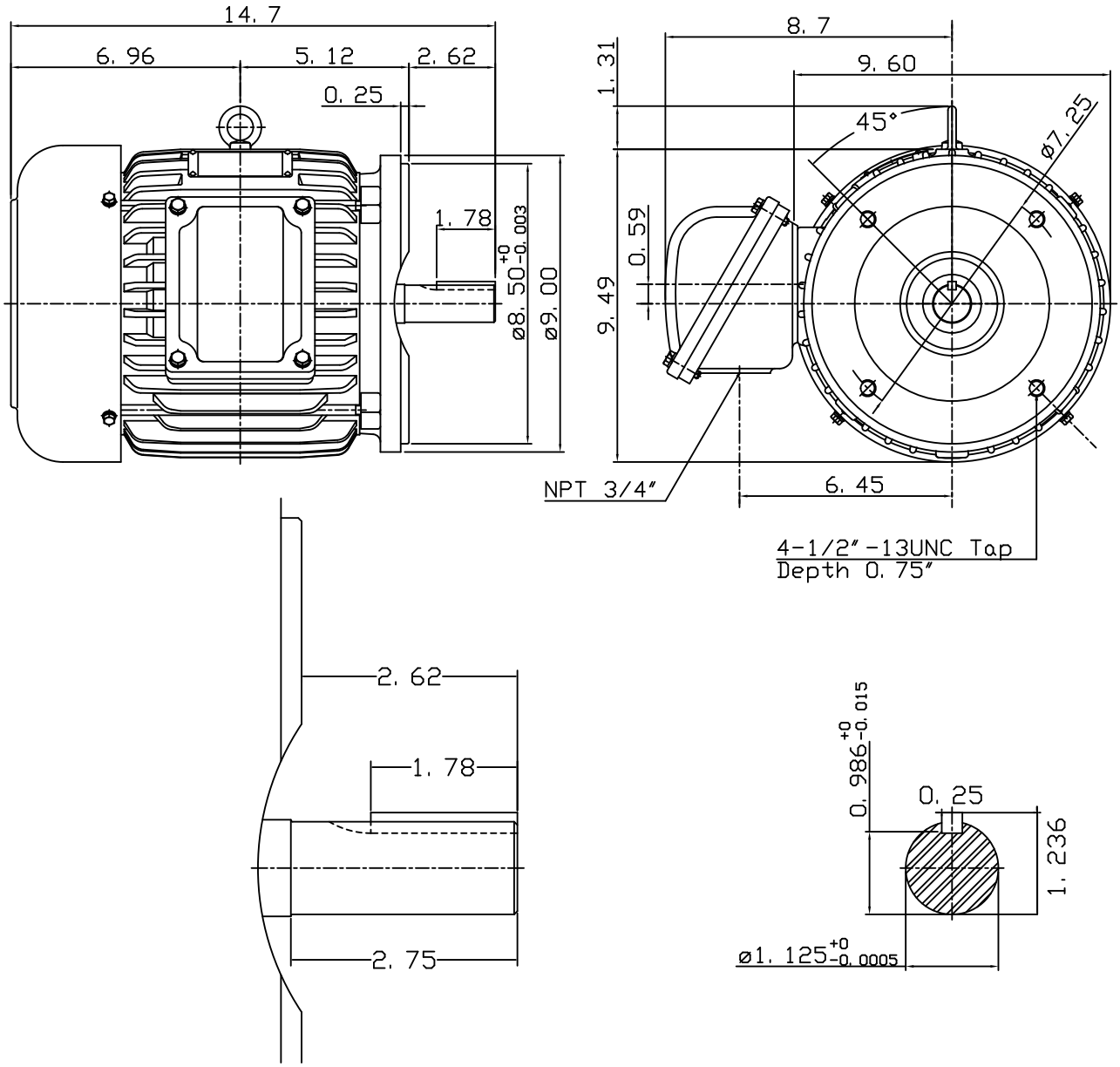

NOTE:
1.EXPLOSION PROOF:
CLASS I GROUP D AND
CLASS II GROUP E,F,G.

DWN.	J.H. LIANG	11-12-98	TECO Westinghouse	DWG NO. 31049U551000
CHKD.	C.S. LO	11-23-98		
APPD.	Y.B. HUANG	11-23-98		