035530

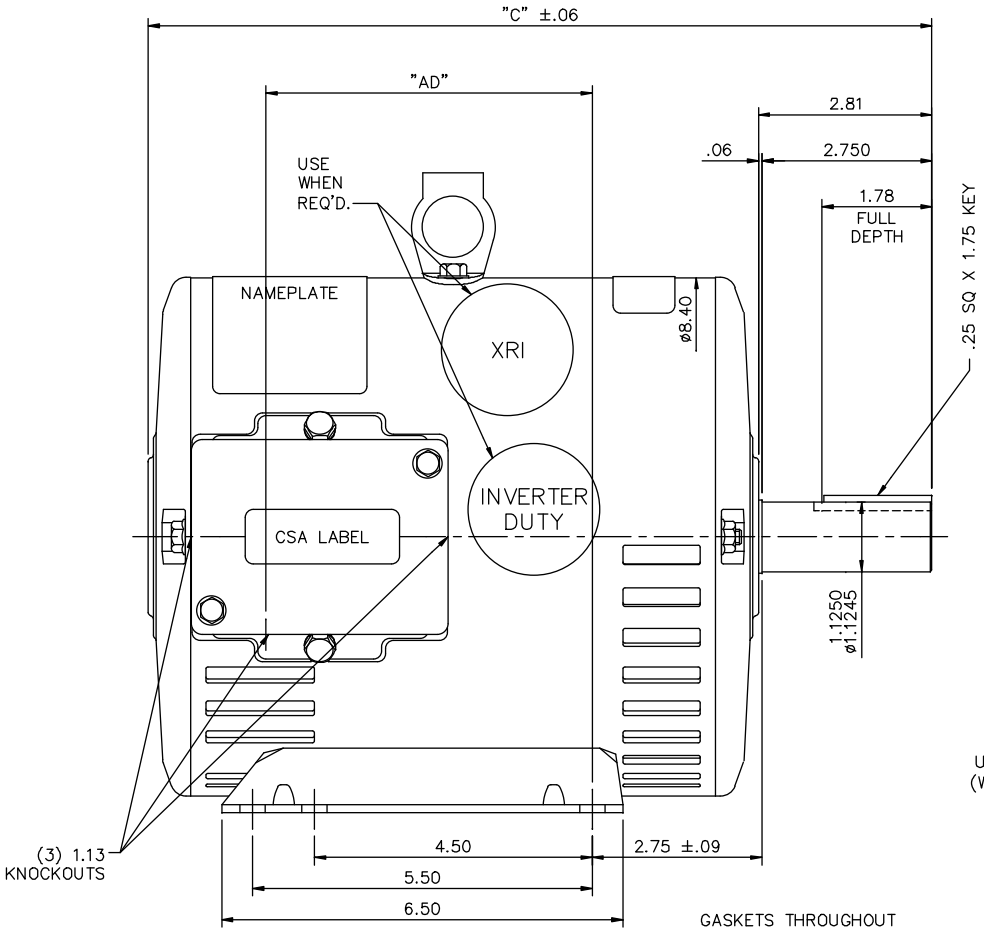

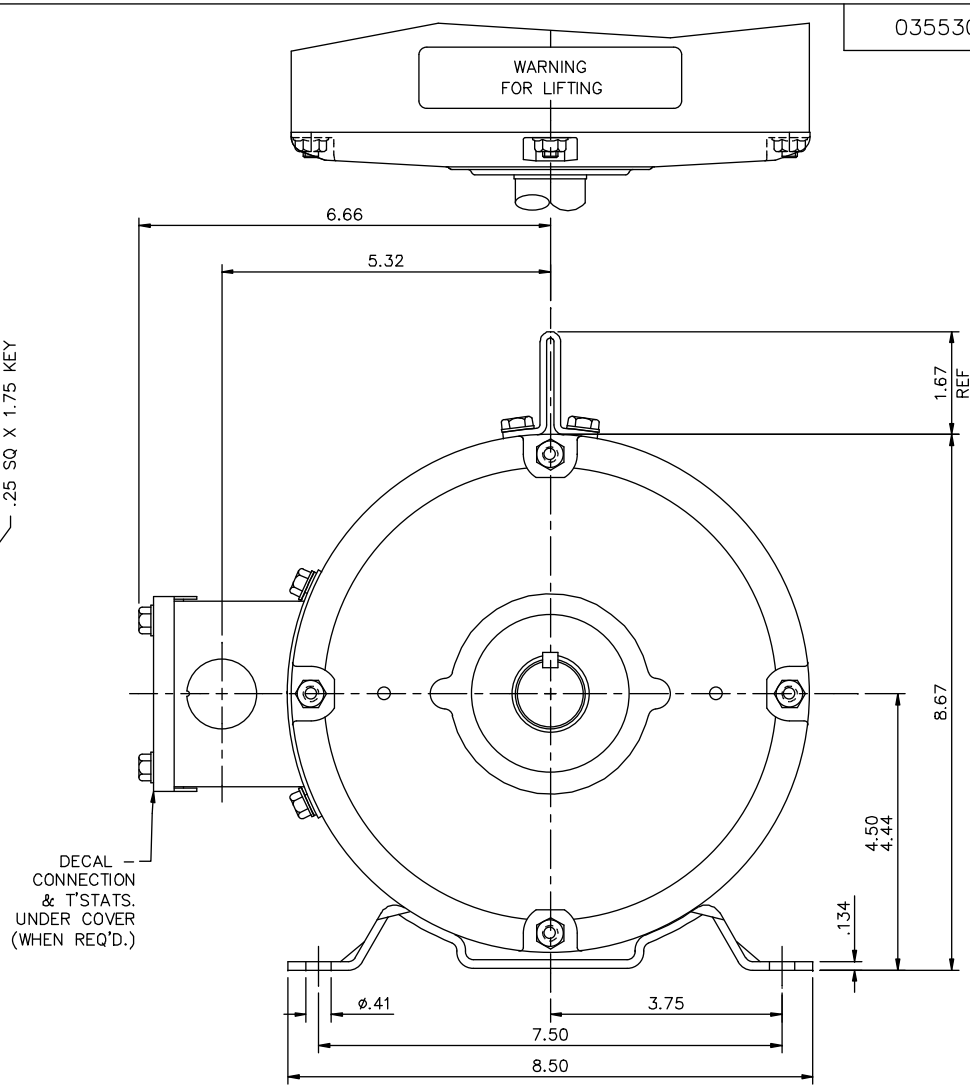

GASKETS THROUGHOUT

DASH NO.	"C"	"AD"
850	12.69	5.25
900	13.19	5.75
950	13.69	6.25
1000	14.19	6.75
1050	14.69	7.25
1100	15.19	7.75
1150	15.69	8.25

NO.	REVISION	BY & DATE	CHK
03	REMOVED INV & XRI DECALS AS PER ISSAC 12-5294	GR 10/30/12	SR
02	ADDED STICKER LOCATIONS PER ECR 91487	JWM 12/04/07	
01	TITLE BLOCK WAS LEESON	YS 7/16/2007	

TOLERANCES UNLESS SPECIFIED

DEC.	INCHES
.X	±.1
.XX	±.03
.XXX	±.005
.XXXX	±.0005
ANG	±1/2°

MARATHON ELECTRIC

TITLE: OUTLINE – 180T FRAME DRIP PROOF – RIGID

MAT'L.

FINISH

CAD FILE: 035530

RFP

DIST: NLV

DRAWN	YS 06/21/07
CHK	
APPD	
SCALE	1=2
REF	035464
FMF	
PREV	

SIZE: B | DRAWING NO.: 035530 | REV.: 03