DATE May 6, 2012	OUTLINE DIMENSIONS	MOTOR TYPE: AEHHXF
CATALOG NO. XP0106C	3-PHASE INDUCTION MOTOR	FRAME NO. 256TC

Pole	HP	KW	Hz	VOLT	Syn. Speed RPM
6	10	7.5	60	230/460	1200

Ins	Rating	Dimension in	Approx Weight	Bearings
F	CONT.	inches	407 lbs.	DE: 6309ZZ NDE: 6307ZZ

Totally Enclosed Fan-Cooled Type. Squirrel-Cage Rotor.

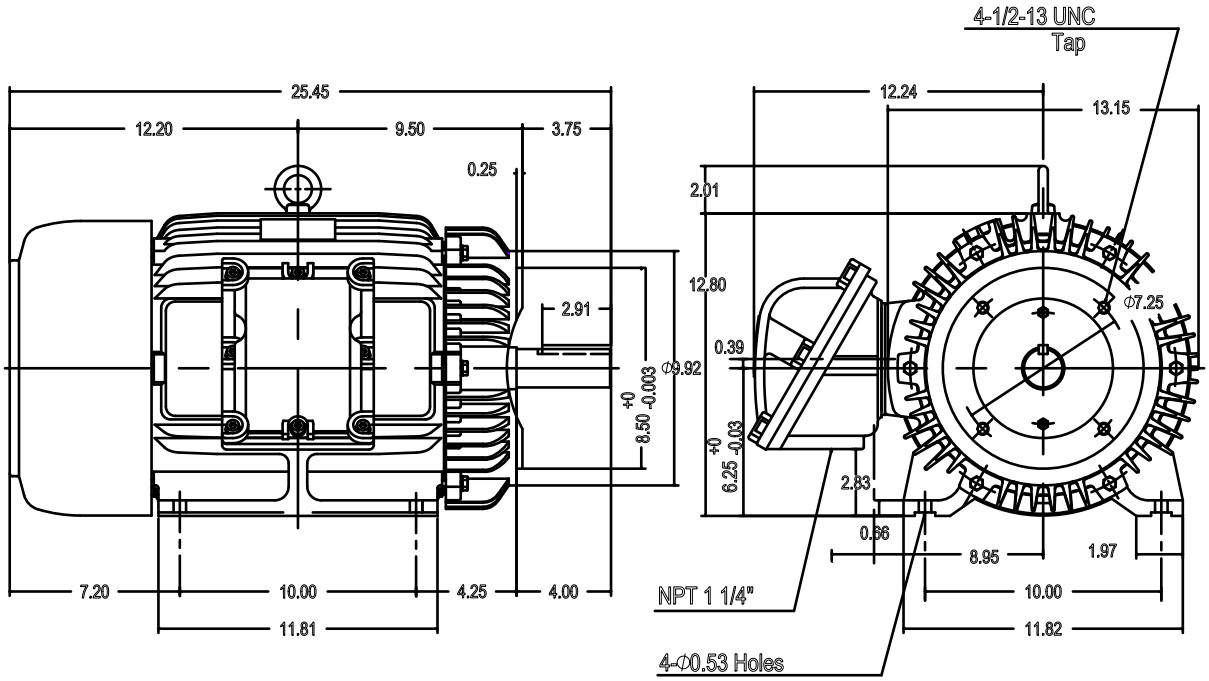

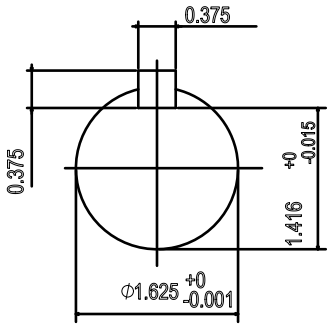

NOTE:

1. EXPLOSION PROOF:
   CLASS I GROUP C,D AND
   CLASS II GROUP E,F,G.

DWN.	J.H.LIANG	12·04·98	TECO Westinghouse	DWG NO. 31049M626191
CHKD.	C.S.LO	12·10·98		
APPD.	Y.B.HUANG	12·10·98		