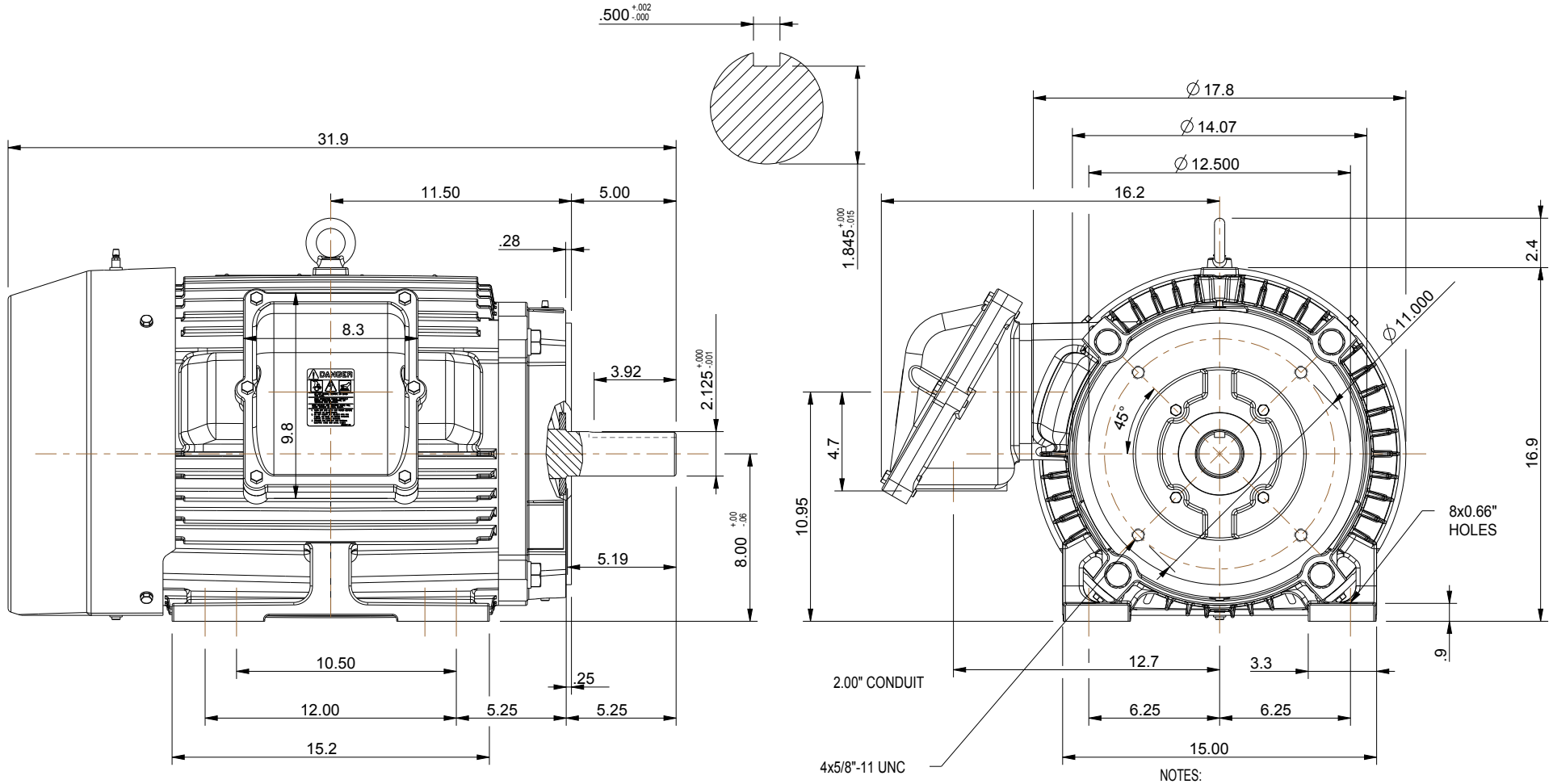

NOTES:
1. MAIN CONDUIT BOX MAY BE ROTATED IN 90° INCREMENTS
2. STANDARD PRODUCT USE BI-DIRECTIONAL FAN. OPPOSITE ROTATION AVAILABLE ONLY BY CONNECTION CHANGE.
3. KEY DIMENSIONS EQUAL 0.500" x 0.500" x 3.875" (MOTOR SUPPLIED WITH KEY)

UNITS: INCHES

TOSHIBA RESERVES THE RIGHT TO MAKE CHANGES OF TECHNICAL IMPROVEMENT WITHOUT NOTICE. DO NOT USE FOR CONSTRUCTION, INSTALLATION, OR APPLICATION PURPOSES UNLESS THE DRAWING IS CERTIFIED.

320TC TEXP FRAME F1 ASSEMBLY

MDSLV804-06

TOSHIBA
TOSHIBA INTERNATIONAL CORPORATION

TOLERANCES	
.X	.1
.XX	.03
.XXX	.005
.XXXX	.0005

MAXIMUM MOTOR WEIGHT
650 lbs.
295 kgs.

NO	REVISION	DRAWN BY	DATE	CHECK
0	FIRST ISSUE	MO	04/09/14	JR

EQPGlobal XP
XT SERIES

DRAWN BY: M. O'DOWD
CHECK BY: J. RUSSELL
APPROVED BY:

www.toshiba.com/ind