Dimensões em polegada
Dimensions in inches

THIS IS AN UPDATED REVISION, THE PREVIOUS ONE MUST BE DISREGARDED.

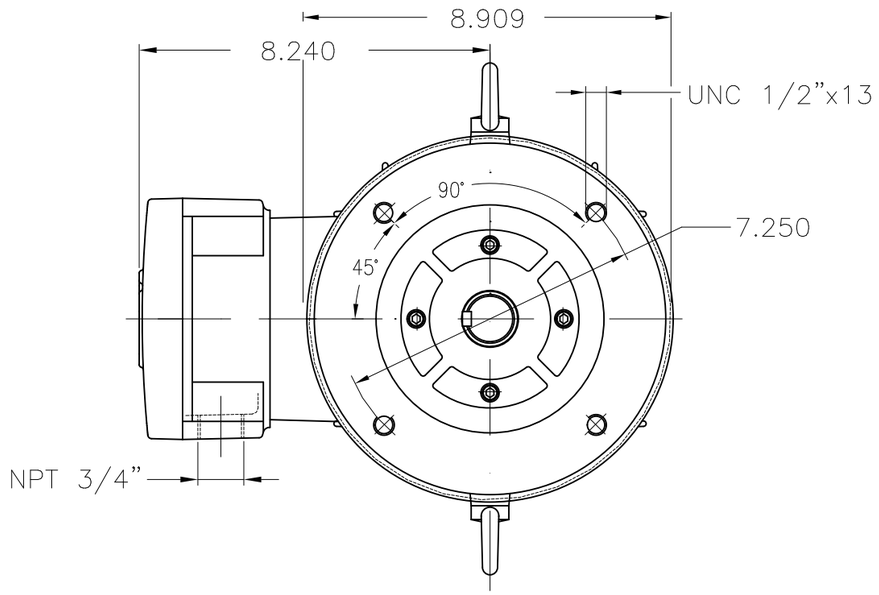

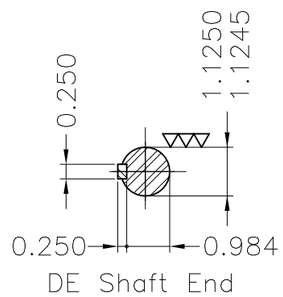

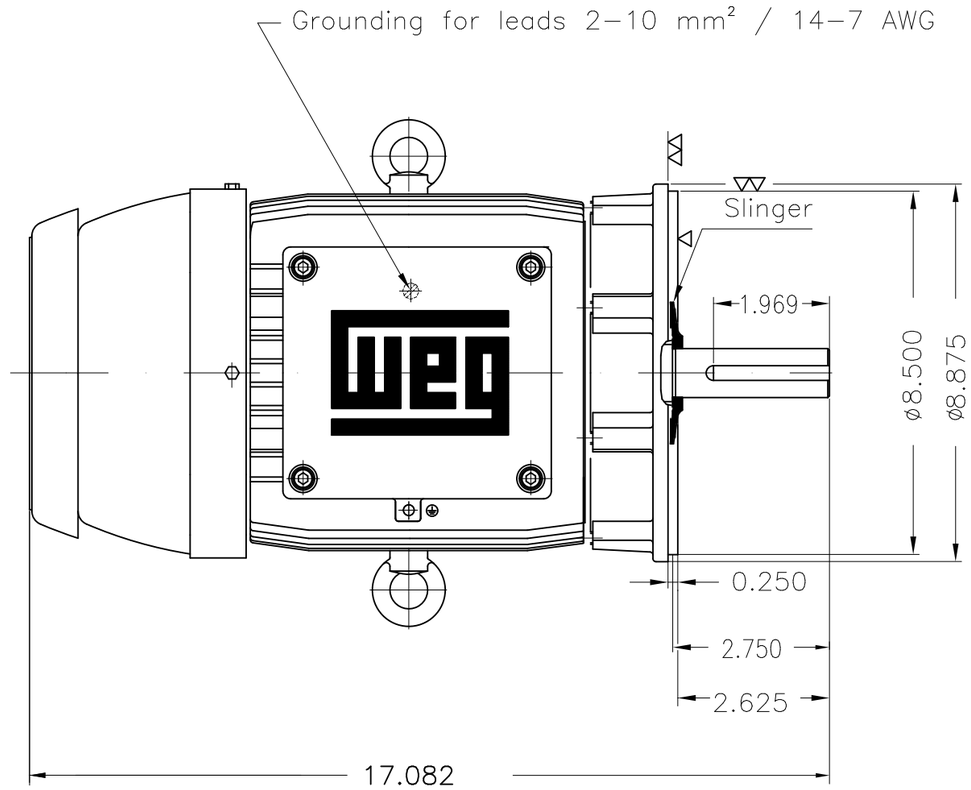

Thermostats 130°C – alarm
Color RAL 5009
Painting plan 202P
Mounting V18

ECM	LOC	SUMMARY OF MODIFICATIONS	EXECUTED	CHECKED	RELEASED	DATE	VER

EXECUTED	USERADMIN	THREE PHASE EXPL. PROOF MOTOR NEMA P.EFF	
CHECKED		FRAME 184TC IP55 TEFC	
RELEASED		WEG code: 12823342	
REL DT	24.07.2017	WMO Jaragua do Sul Product Engineering	SHEET 1 / 1

5 HP 04 Poles 60Hz

A

ZME A3

WEG's property. Forbidden reproduction without previous authorization.