SS622180ME

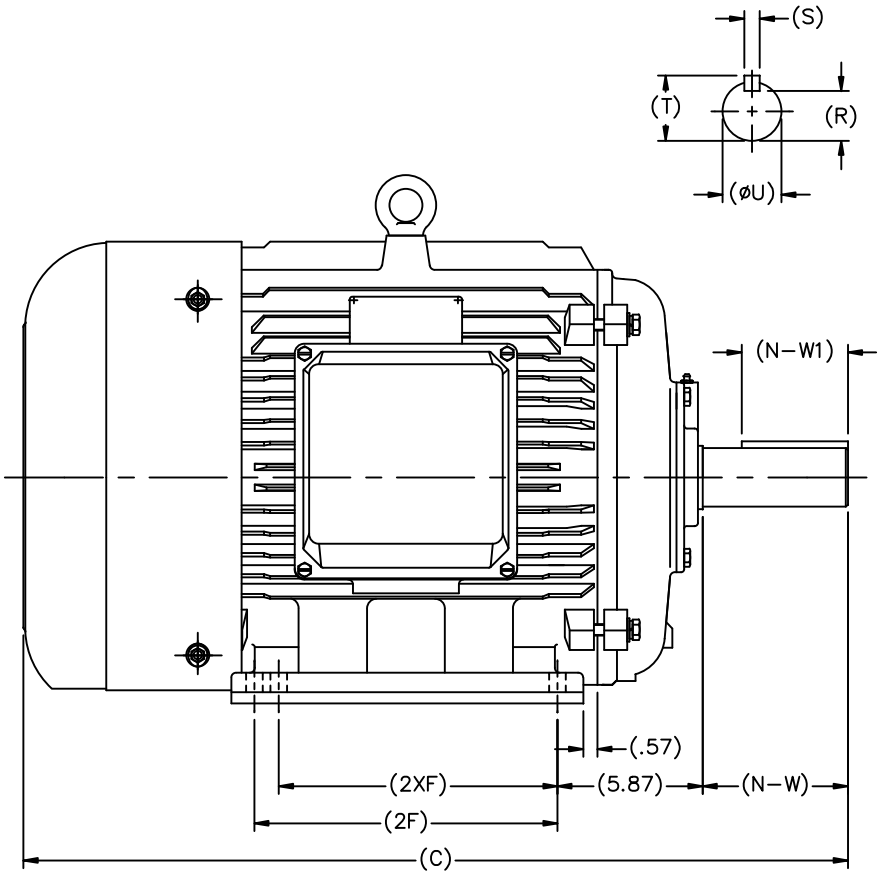

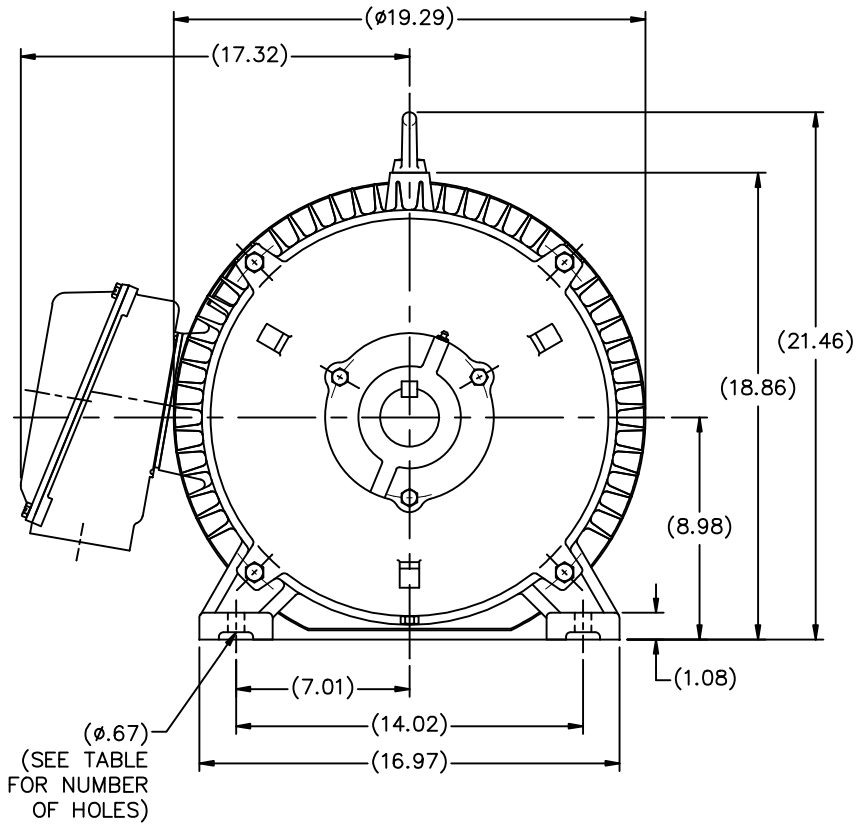

NT364TS−2	30.20	11.26	---	4	3.74	2.05	1.87	1.59	0.50	2.09
NT365TS−2	31.18	12.24	11.26	6						
NT364T−4, 6	32.32	11.26	---	4	5.87	4.29	2.37	2.01	0.63	2.64
NT365T−4, 6	33.31	12.24	11.26	6						
FRAME	C	2F	2XF	HOLES	N−W	N−W1	øU	R	S	T

NO.	REVISION	BY & DATE
1	REMOVED LOGO FROM C'BOX FACE PER HEBEI	JJB 4/18/2011

TOLERANCES UNLESS SPECIFIED

DEC.	INCHES
.X	±.1
.XX	±.03
.XXX	±.005
.XXXX	±.0005
ANG	±7'30"

CHK

RFP

DIST

MARATHON ELECTRIC

TITLE OUTLINE
360 FR. – TEFC – (REDESIGNED)

MAT'L.

FINISH

CAD FILE SS622180ME

DRAWN MSG	02–13–2007
CHK ML	02–16–2207
APPD SB	02–23–2007
SCALE	1=5
REF	
FMF	HEBEI
PREV	

SIZE	DRAWING NO.	PAGE OF	REV.
B	SS622180ME		1

4/18/2011 8:03:49 AM