169554-60ME

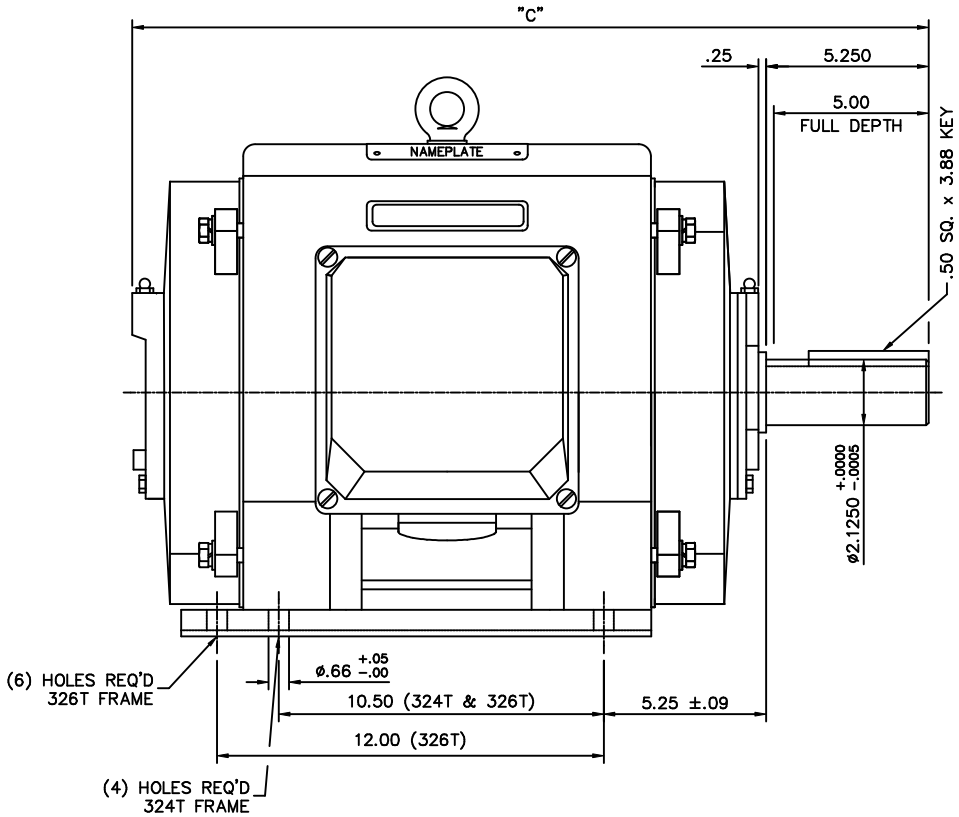


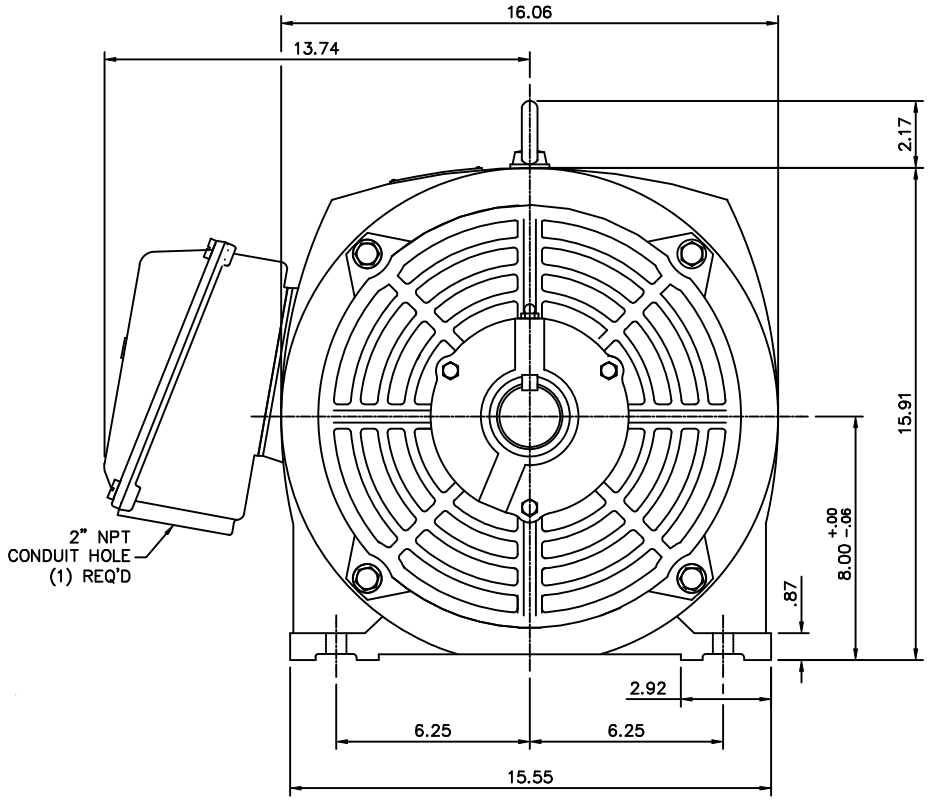


| FRAME DESIGN | "C" |
|---|---|
| 324T | 26.02 |
| 326T | 27.52 |

| NO. | REVISION | BY & DATE |
|---|---|---|
| 1 | NEW DRAWING | CTO 05/21/02 |

TOLERANCES UNLESS SPECIFIED

| DEC. | INCHES |
|---|---|
| .X | ±.1 |
| .XX | ±.03 |
| .XXX | ±.005 |
| .XXXX | ±.0005 |
| ANG | ±1/2° |

CHK

MARATHON ELECTRIC

TITLE: OUTLINE 320T FRAME DRIP PROOF – RIGID

MAT'L. CAST IRON

FINISH

CAD FILE 16955460me

RFP

DIST

DRAWN CTO 04-25-2002
CHK ML 05-20-2002
APPD SB 05-21-2002
SCALE 1=1
REF
FMF
PREV

SIZE B | DRAWING NO. 169554-60ME | REV. 1