Dimensões em polegada
Dimensions in inches

THIS IS AN UPDATED REVISION, THE PREVIOUS ONE MUST BE DISREGARDED.

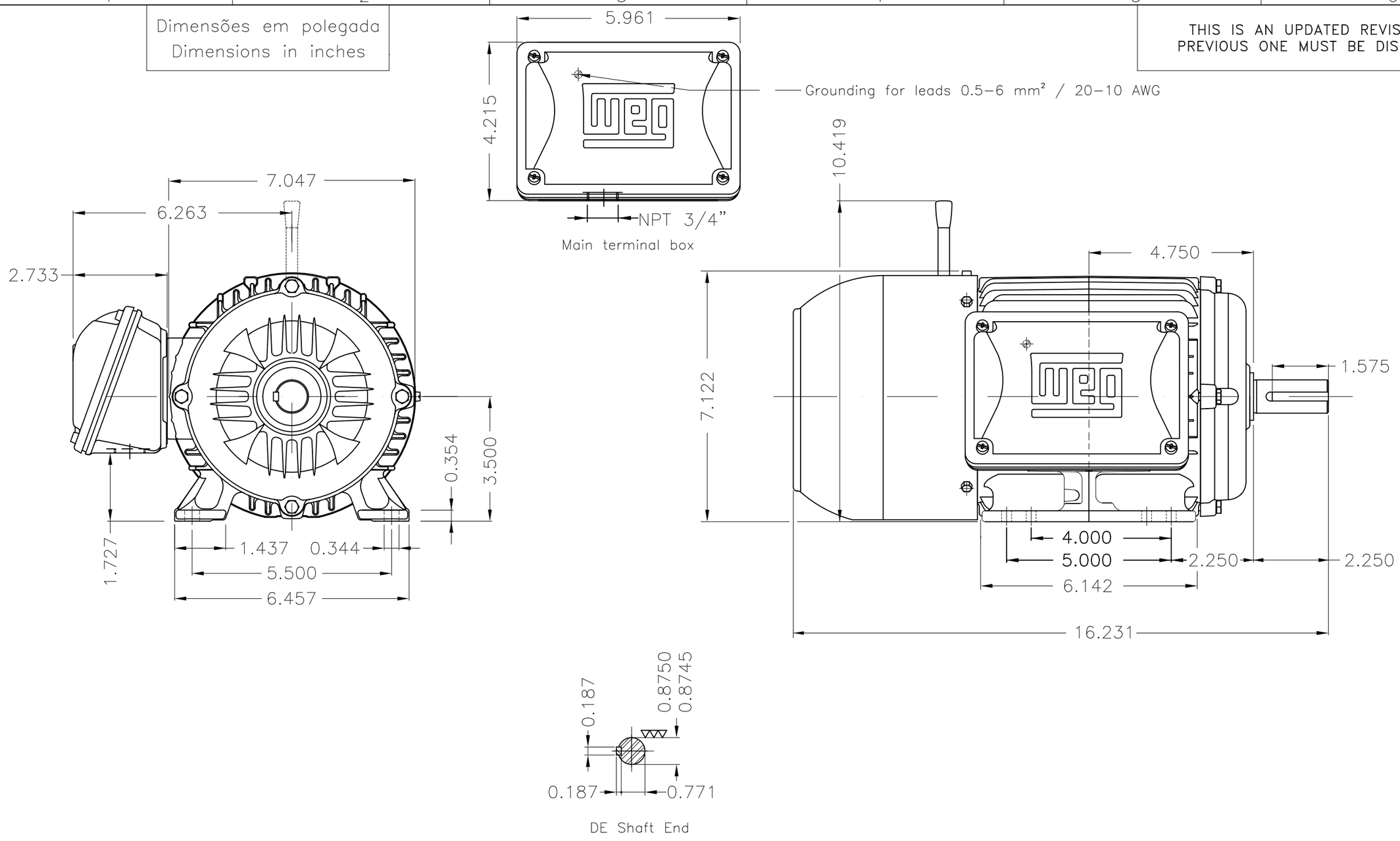

Brake voltage 440–480 V
Color RAL 5009
Painting plan 207A
Mounting B3R(D)

ECM	LOC	SUMMARY OF MODIFICATIONS	EXECUTED	CHECKED	RELEASED	DATE	VER

EXECUTED	USERADMIN	W22 THREE PHASE BRAKE MOTOR - NEMA PREMIUM EFF	
CHECKED		FRAME 143/5T IP55 TEFC	
RELEASED		WEG code: 13473876	
REL DT	24.07.2017	WMO	Jaragua do Sul	Product Engineering	SHEET 1 / 1

1 HP 04 Poles 60Hz

A

ZME A3

WEG's property. Forbidden reproduction without previous authorization.