RBC PROPRIETARY AND CONFIDENTIAL INFORMATION
This document is the property of REGAL BELOIT CORPORATION ("RBC") including its subsidiaries and divisions and contains proprietary information of RBC. This document is loaned on the express condition that neither it nor the information contained therein shall be disclosed to others without the express written consent of RBC, and that the information shall be used by the recipient only as approved expressly by RBC. This document shall be returned to RBC upon its request. This document may be subject to certain restrictions under U.S. export control laws and regulations.

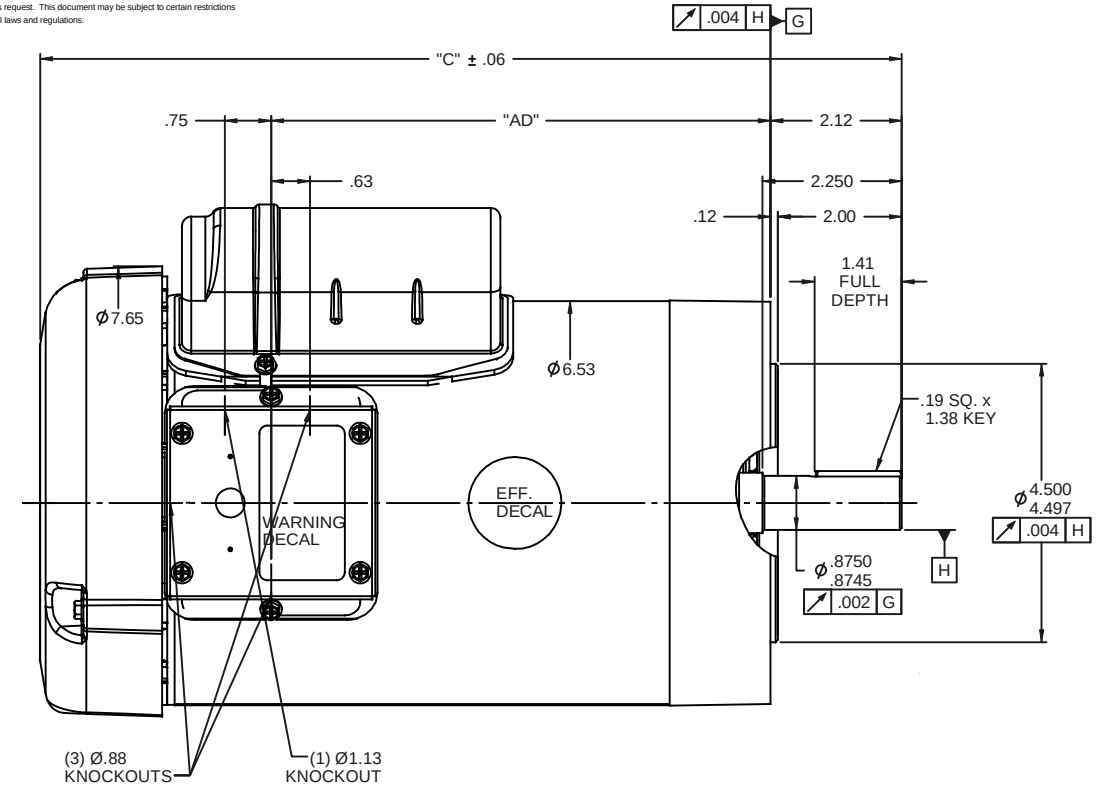

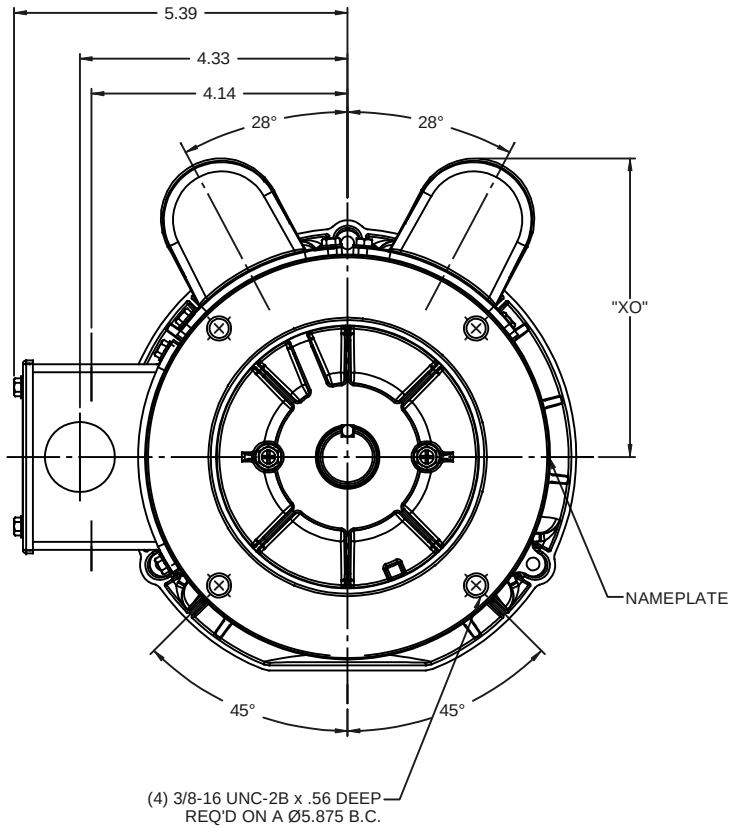

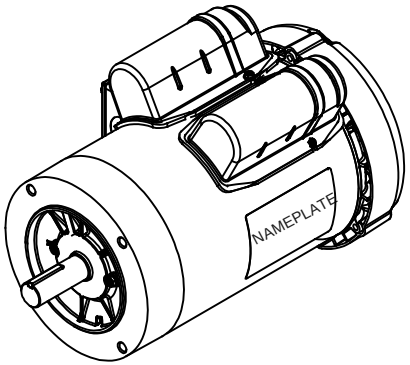

DASH NO.	"C"	"AD"
700	12.93	7.07
750	13.43	7.57
800	13.93	8.07
850	14.43	8.57

CAP. DASH	"XO"
A	4.33
B	4.78
C	5.00

NOTE:
1) GASKETS THROUGHOUT

				TOLERANCES UNLESS SPECIFIED	LEESON ELECTRIC MOTORS GEARMOTORS AND DRIVES	DRAWN	GRB 08/12/08
				DEC INCHES		CHK	DJ 08/12/08
				.X ±.1		APPR	
				.XX ±.03	TITLE OUTLINE - 140TC FRAME	SCALE	1:2
				.XXX ±.005	TEFC - "C" FACE	REF	028644
				.XXXX ±.0005	MAT'L GENERAL PURPOSE	FMF	120017.00
NO	REVISION	BY & DATE	CHK	ANG ±1/2°	FINISH	PAGE	1 OF 1
THIRD ANGLE PROJECTION			RFP	08/12/08	PREV	SIZE B	DRAWING NO 028864 REV
			NETWORK FILE NAME				