TYPE	OUTPUT		POLE	TIME RATING	VOLTAGE V	Hz	SYN.SPEED R.P.M
	HP.	kW.					
AEHE	350	261	8	CONT.	460	60	900

TOTALLY ENCLOSED FAN-COOLED TYPE, SQUIRREL-CAGE ROTOR

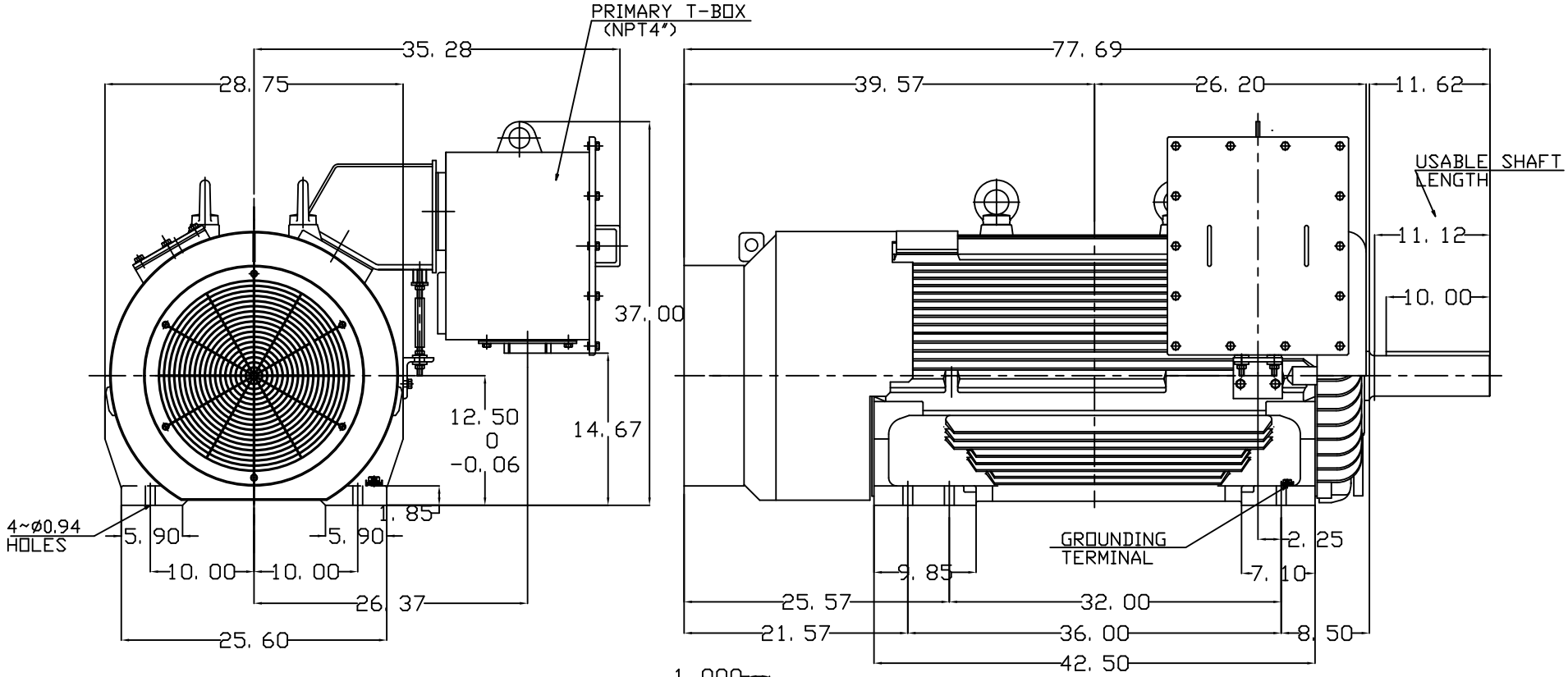

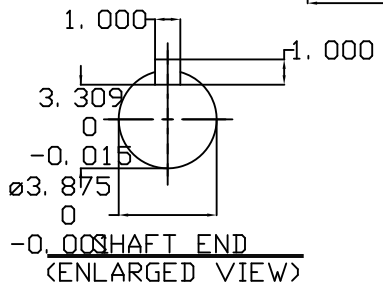

NOTE:
1. DIMENSIONS IN inch
2. FRAME NO. 5011B(5010B)
3. F CLASS INSULATION, S.F.1.15
4. FOR DIRECT FLEXIBLE COUPLING
5. ENCLOSURE: IP55
6. BEARING SIZE: DRIVE-END 6324
   OPP. DRIVE-END 6320
7. MOTOR APPROX. WEIGHT: 4800 lb

DWN.	Y.DU	MAR-20-2014
CHKD.	W.CHENG	MAR-29-2014
APPD.	C.SHIH	MAR-29-2014

DATE

CATALOG # E3508

OUTLINE DIMENSIONS

3-PHASE INDUCTION MOTOR

TECO Westinghouse

DWG NO. 4B040C017 REV:00