SS622243

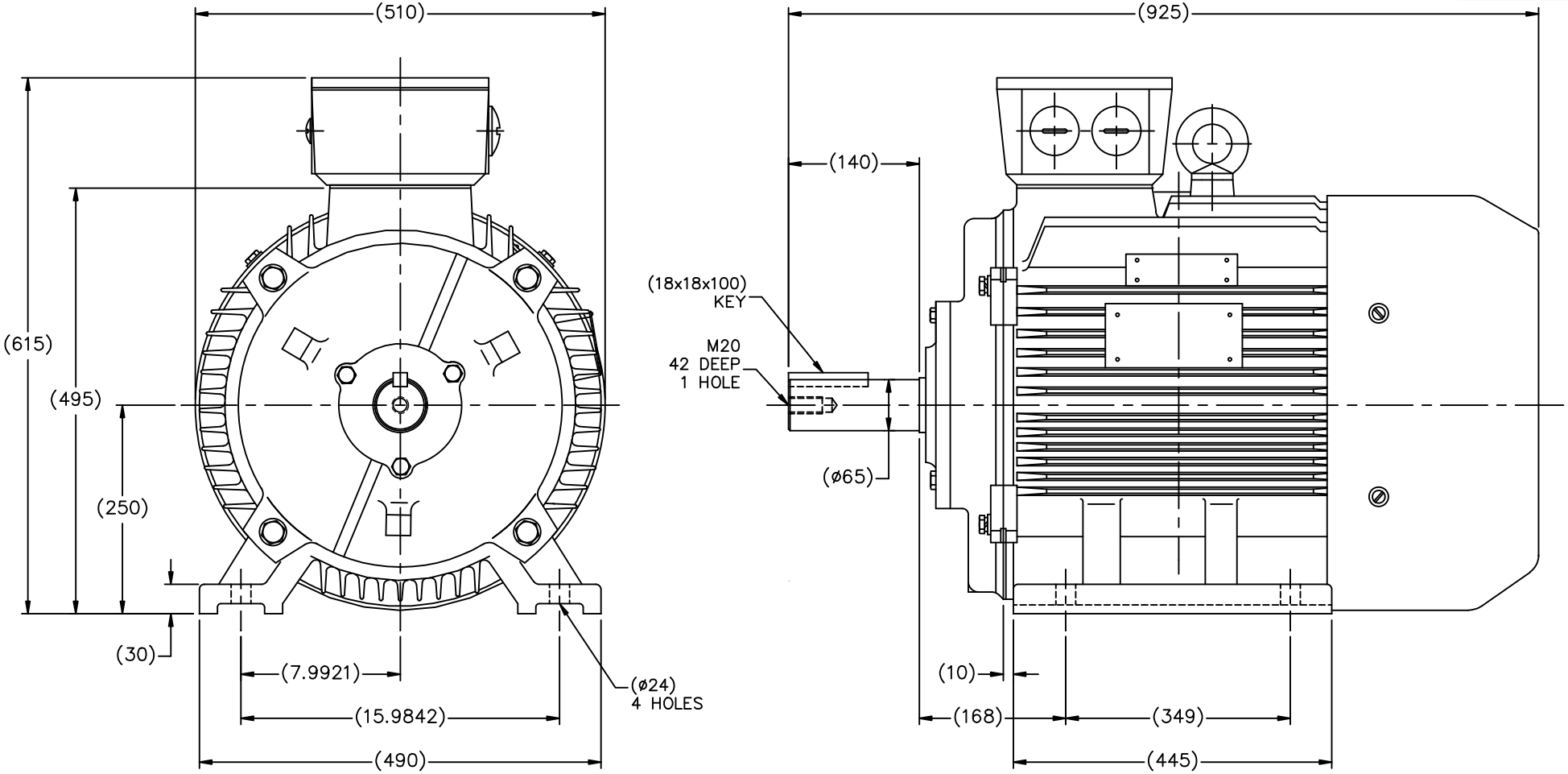

(MAY NOT BE DRAWN TO SCALE)

(DIMENSIONS ARE IN MILLIMETERS)

				TOLERANCES UNLESS SPECIFIED		LEESON ELECTRIC MOTORS GEARMOTORS AND DRIVES	DRAWN MSG 11–17–2010	
				DEC.	METRIC		CHK MJS 11–18–2010	
				.X	±2.5		APPD SB 11–18–2010	
				.XX	±.76	TITLE OUTLINE – IEC PREMIUM DF250M–69	SCALE 1=5	
				.XXX	±.127		REF	
				.XXXX	±.0127	MAT'L.	FMF HEBEI	
NO.	REVISION	BY & DATE	CHK	ANG	±7'30"	FINISH	PREV	
THIS DRAWING IN DESIGN AND DETAIL IS OUR PROPERTY AND MUST NOT BE USED EXCEPT IN CONNECTION WITH OUR WORK ALL RIGHTS OF DESIGN AND INVENTION ARE RESERVED THIS IS AN ELECTRONICALLY GENERATED DOCUMENT – DO NOT SCALE THIS PRINT			RFP 11–18–2010			CAD FILE SS622243	SIZE B	DRAWING NO. SS622243 PAGE OF REV.
			DIST					

11/19/2010 10:48:44 AM