DATE February 18, 2004	OUTLINE DIMENSIONS	MOTOR TYPE: ASGAJP
CATALOG NO. DJP0206	3-PHASE INDUCTION MOTOR	FRAME NO. 286JP

Pole	HP	kW	Hz	VOLT	Syn. Speed r/min(rpm)
6	20	15	60	230/460	1200

Ins	Rating	Dimension in	Approx Weight	Bearings
F	CONT.	inches	359 lbs.	DE: 6311ZZC3 NDE: 6211ZZC3

Open Protected Drip-Proof Type, Squirrel-cage Rotor.

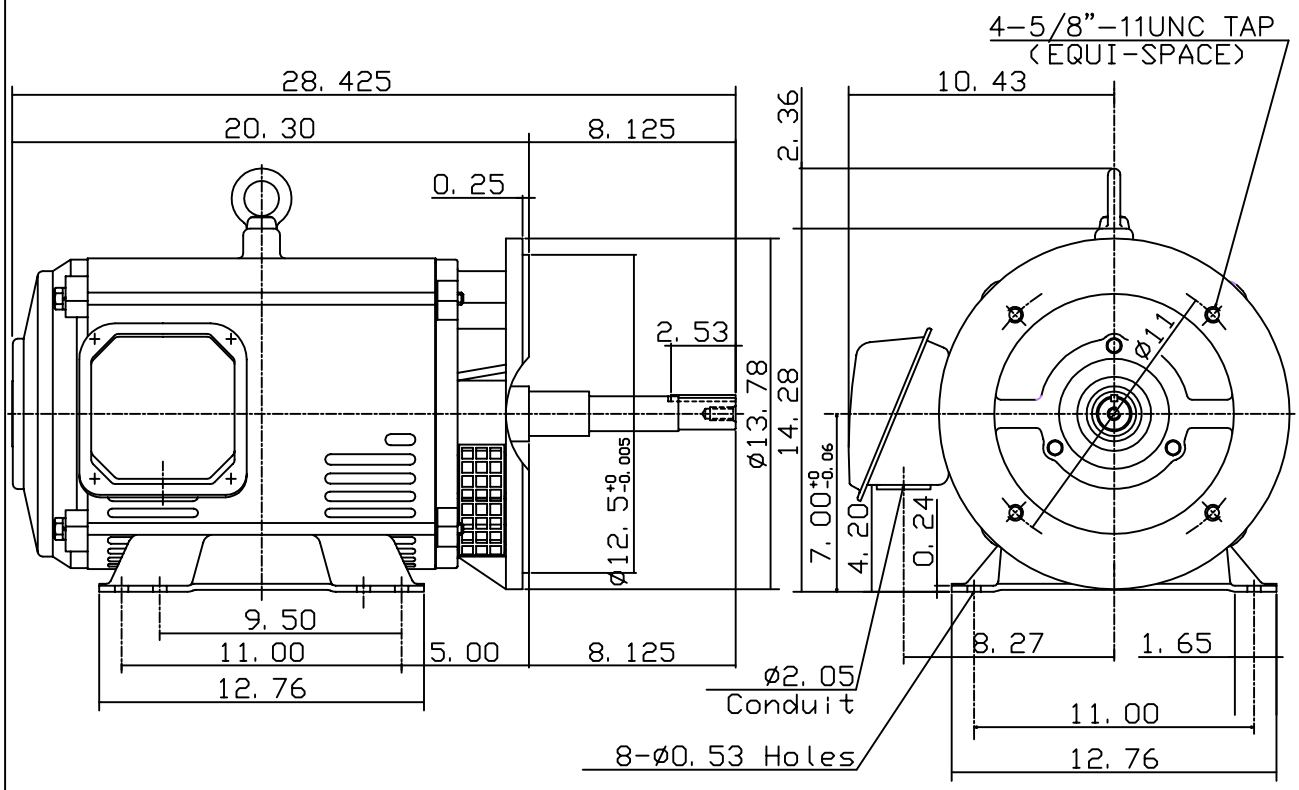

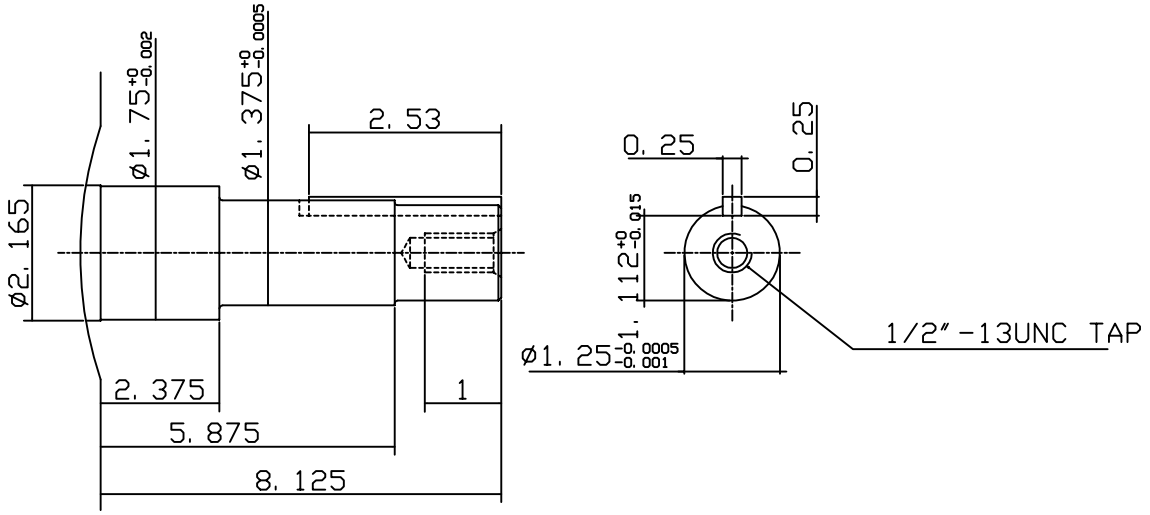

DWN.	J. T. HWANG	04·11·03	TECO Westinghouse	DWG NO.
CHKD.	J. S. JEAN	04·11·03		31049U529525
APPD.	Y. B. HUANG	04·11·03		