RBC PROPRIETARY AND CONFIDENTIAL INFORMATION
This document is the property of REGAL BELOIT CORPORATION ("RBC") including its subsidiaries and divisions and contains proprietary information of RBC. This document is loaned on the express condition that neither it nor the information contained therein shall be disclosed to others without the express written consent of RBC, and that the information shall be used by the recipient only as approved expressly by RBC. This document shall be returned to RBC upon its request. This document may be subject to certain restrictions under U.S. export control laws and regulations.

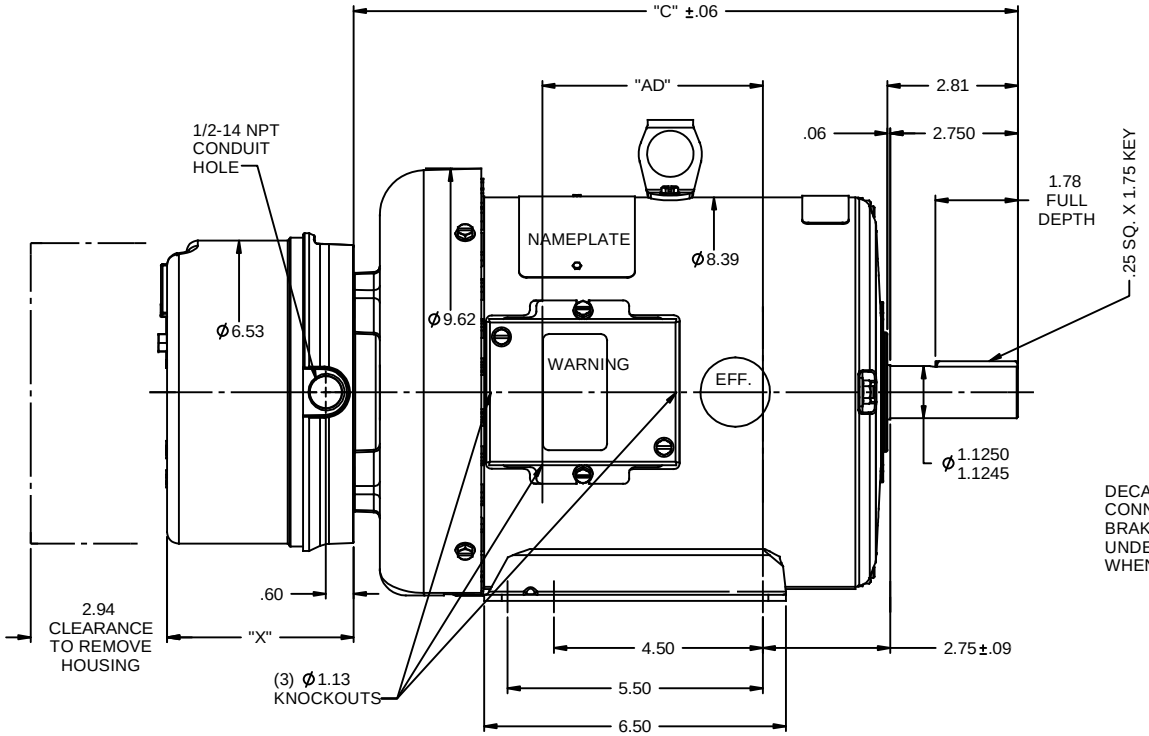

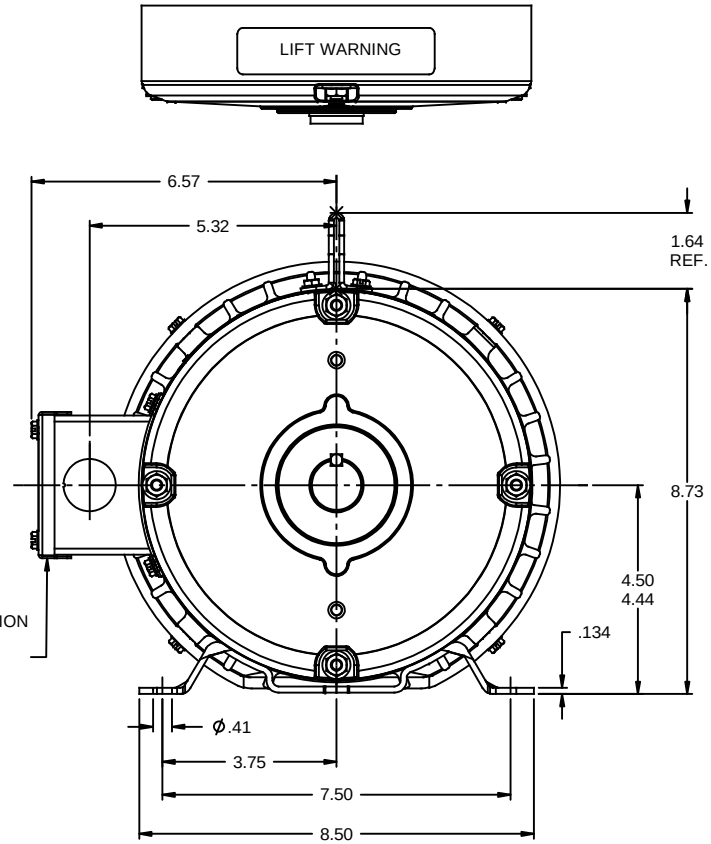

DASH NO.	"C"	"AD"
800	14.32	4.75
850	14.82	5.25
900	15.32	5.75
950	15.82	6.25
1000	16.32	6.75
1050	16.82	7.25
1100	17.32	7.75
1150	17.82	8.25

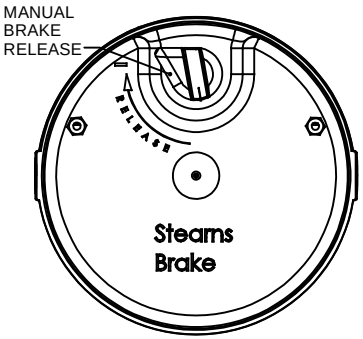

BRAKE HOUSING

BRAKE TORQUE	"X"
15 FT-LB	4.00
20 FT-LB	4.46
25 FT-LB	4.46

GASKETS THROUGHOUT
MINIMUM FRAME LENGTH SHOULD BE 8.00"

NO	REVISION	BY & DATE	CHK
-	REDRAWN ON SOLIDWORKS	LST 11/9/2009	XX

TOLERANCES UNLESS SPECIFIED

DEC	INCHES
.X	±.1
.XX	±.03
.XXX	±.005
.XXXX	±.0005
ANG	±1/2°

REGAL-BELOIT CORPORATION

TITLE OUTLINE - 180T FRAME
TEFC- RIGID
MAT'L BRAKE MOTOR
FINISH

DRAWN RDW 4/18/07
CHK
APPR SW 4/18/07
SCALE 3:8
REF OL131613
FMF
PAGE OF

THIRD ANGLE PROJECTION
RFP
PREV
NETWORK FILE NAME
SIZE B
DRAWING NO 035517
REV -

4/13/2011 12:53:12 PM