SHEET 1 | REV 0 | 52A111881 | DRAWING NO. | SIZE A

THIRD ANGLE PROJECTION

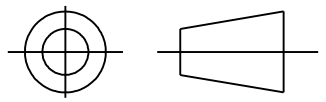

REVISIONS			
REV.	DESCRIPTION	DATE	APPROVED
0	CREATED PER IS10 - 4907	11/15/10	KARTHIK

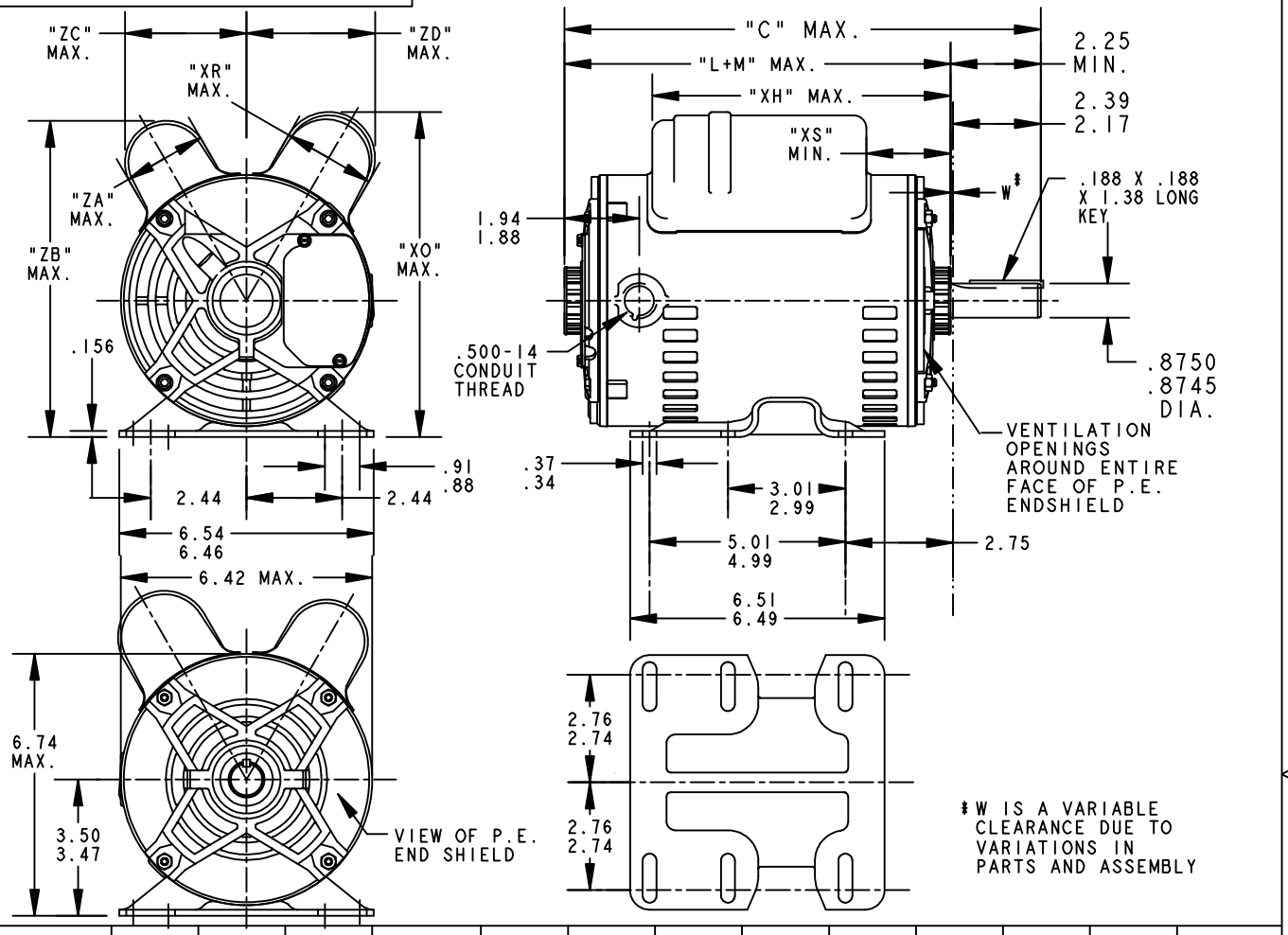

P	TYPE	RBC SIZE	NEMA FR	"C"	"L+M"	"XH"	"XO"	"XR"	"XS"	"ZA"	"ZB"	"ZC"	"ZD"	MIN. SHELL
9	KCR	49	56HZ	15.41	13.04	9.74	8.11	2.10	4.14	2.70	8.73	3.61	3.12	10.71
8	KCR	49	56HZ	15.41	13.04	9.74	8.11	2.10	4.14	2.10	8.11	3.12	3.12	10.71
7	KCR	49	56HZ	14.33	11.96	9.67	7.74	1.60	4.00	2.10	8.18	3.20	2.80	9.63
6	KCR	49	56HZ	15.41	13.04	9.74	8.39	2.40	4.05	2.40	8.39	3.33	3.33	10.71
5	KCR	49	56HZ	15.41	13.04	9.74	8.39	2.40	4.05	2.15	8.18	3.20	3.33	10.71
4	KCR	49	56HZ	14.33	11.96	9.41	8.33	2.40	3.67	2.10	8.28	3.27	3.33	9.63
3	KCR	49	56HZ	15.41	13.04	9.74	8.39	2.40	4.05	2.15	8.18	3.20	3.33	10.71
2	KCR	49	56HZ	15.41	13.04	9.74	7.81	1.60	4.05	2.15	8.18	3.20	2.86	10.71
1	KCR	49	56HZ	14.33	11.96	9.67	8.39	2.40	4.00	2.15	8.18	3.20	3.33	9.63

SIGNATURES		DATE
MODEL	-	-
DETAIL	KARTHIK	11/15/10
CHECKED	.	.
ENGRG	.	.
MFG	.	.
QUALITY	.	.
ISSUED	DURGA	11/15/10

SOLID MODEL: 52A111881

FOR ADDITIONAL INFO REFER TO:
APPLIED PRACTICES .
DIMENSIONS ARE IN INCHES
MATERIAL .

REGAL-BELOIT CORPORATION

TITLE **OUTLINE**

40 FRAME REDESIGN - GENERAL PURPOSE NOTOR - DRIP PROOF - BALL BEARING - WELDED BASE

SIZE A | DRAWING 52A111881 | REV 0

SCALE: 1.000 | REF. No: . | SHEET 1 OF 1

11/15/2010 8:20:28 AM